Os acessórios para produtos ECHO podem ser encontrados em:
*Accessories for ECHO products can be found at:*
**www.echo-latinamerica.com/products/catalogs**

| **TUBO AL POR MAYOR / BULK PIPE** | |
|---|---|
| **3×5mm black/negro** | **90014** |
| **3×6mm black/negro** | **90015** |
| **3×7mm black/negro** | **90016** |
| **3×6mm clear/transparente** | **90017** |
| **2×4mm clear/transparente** | **90018** |

| **CUERDA DEL ARRANCADOR AL POR MAYOR** | |
|---|---|
| **BULK STARTER ROPE** | |
| **Diameter / diámetro 2.3 mm (3/32 in.)** | **99944435000** |
| **Diameter / diámetro 3.0 mm (1/8 in.)** | **99944440000** |
| **Diameter / diámetro 3.5 mm (9/64 in.)** | **99944445000** |
| **Diameter / diámetro 4.0 mm (5/32 in.)** | **99944450000** |
| **Diameter / diámetro 4.4 mm (11/64 in.)** | **99944455000** |
| **Diameter / diámetro 4.8 mm (3/16 in.)** | **99944460000** |

| **ACCESORIOS OPCIONALES** | |
|---|---|
| **Cabezal Manual/Fija de 2 líneas** | **21560066** |
| **Cabezal Z-5 Tap-N-Go** | **X047000332** |
| **Disco Metal de 3 dientes - 9" dia.** | **X405000011** |
| **Disco Metal de 3 dientes - 10" dia.** | **X405000001** |
| **Disco Metal de 3 dientes - 10" dia.** | **X400000011** |

| **OPTIONAL ACCESSORIES & ATTACHMENTS:** | |
|---|---|
| 2-Line Manual/Fixed Nylon Head | 21560066 |
| Z-5 Tap-N-Go Nylon Cutting Head | X047000332 |
| 3-Cutter Metal Blade - 9" dia. | X405000011 |
| 3-Cutter Metal Blade - 10" dia. | X405000001 |
| 3-Cutter Metal Blade - 10" dia. | X400000011 |

# *LISTA DE PIEZAS*
## *PARTS CATALOG*

# SRM-4300F Desmalezadora
## SRM-4300F Brushcutter



**42.7 cc**

**NÚMERO DE SERIE**
SERIAL NUMBER

**S51220001001 - S51220999999**

**ECHO Incorporated**
400 Oakwood Road, Lake Zurich, Illinois 60047
WWW.ECHO-USA.COM

©2018 ECHO Incorporated. All Rights Reserved

P/N 99922201109
REVISED 05/08/19

**Cubierta de motor** ..... **3**
Engine Cover

**Motor** ..... **4**
Engine

**Motor** ..... **5**
Engine

**Carburador** ..... **6**
Carburetor

**Carburador** ..... **7**
Carburetor

**Admisión** ..... **8**
Intake

**Escape** ..... **9**
Exhaust

**Encendido** ..... **10**
Ignition

**Arrancador** ..... **11**
Starter

**Sistema de combustible** ..... **12**
Fuel System

**Embrague** ..... **13**
Clutch

**Tubo Principle / Mangos** ..... **14**
Main Pipe / Handles

**Mango de Control** ..... **15**
Control Handle

**Caja de Engranajes** ..... **16**
Gear Case

**Protector Contra Residuos** ..... **17**
Debris Shield

**Arnés** ..... **17**
Harness

**Herramientas** ..... **18**
Tools

**Juegos de mantenimiento** ..... **18**
Maintenance Kits

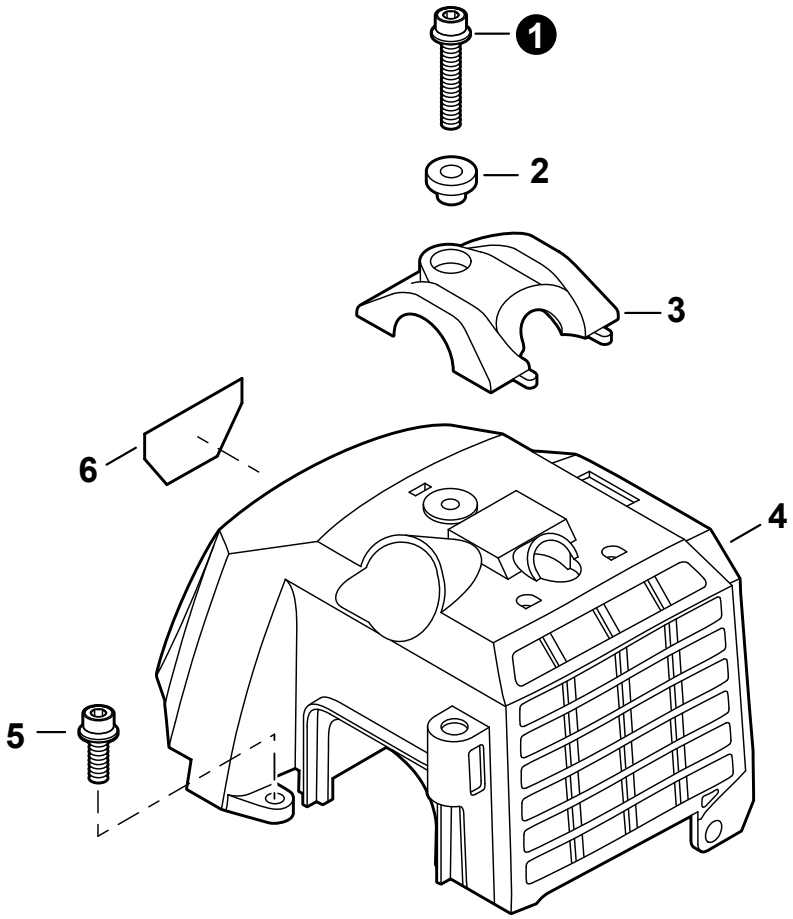


| NO. | PART NUMBER | QTY. | DESCRIPCIÓN | DESCRIPTION |
|---|---|---|---|---|
| 1 | 90010605020 | 1 | PERNO 5×20 | BOLT 5×20 |
| 2 | V353000020 | 1 | COLLAR 5 | COLLAR 5 |
| 3 | A162000020 | 1 | PROTECTOR | GUARD, TOP |
| 4 | A160000242 | 1 | CUBIERTA DE MOTOR | COVER, ENGINE |
| 5 | 90010605012 | 1 | PERNO 5×12 | BOLT 5×12 |
| 6 | X547001040 | 1 | ETIQUETA MODELO SRM-4300 | LABEL - MODEL SRM-4300 |

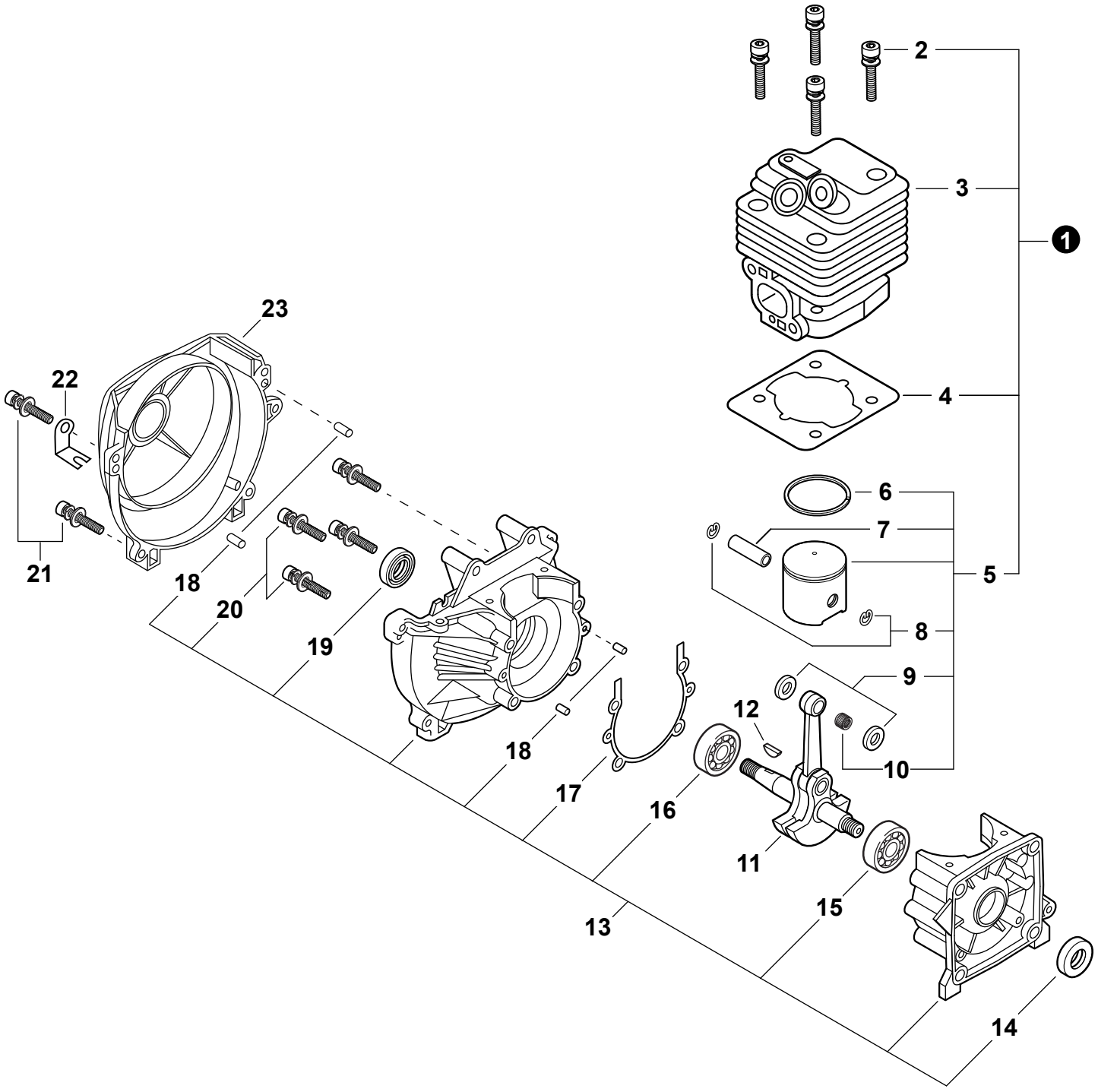
2
3
1
4
6
7
5
8
9
10
12
11
16
17
18
13
15
14
23
22
21
18
20
19

| NO. | PART NUMBER | QTY. | DESCRIPCIÓN | DESCRIPTION |
|---|---|---|---|---|
| **1** | **P021039020** | **1** | **JUEGO DE REPARACIÓN DE MOTORES** | **REPAIR KIT, ENGINE** |
| 2 | 90016205020 | 4 | +PERNO 5×20 | +BOLT 5×20 |
| 3 | A130000870 | 1 | +CILINDRO | +CYLINDER |
| 4 | V100000040 | 1 | +EMPAQUETADURA DE CILINDRO | +GASKET, CYLINDER |
| **5** | **P021014262** | **1** | **+JUEGO DE PISTÓN** | **+PISTON KIT** |
| 6 | 10001110530 | 1 | ++ANILLO DEL PISTÓN | ++RING, PISTON |
| 7 | V608000000 | 1 | ++PASADOR DEL PISTÓN 10 | ++PIN, PISTON 10 |
| 8 | V580000010 | 2 | ++ANILLO RETENEDOR Ø10 | ++RING, SNAP Ø10 |
| 9 | V307000530 | 2 | ++ARANDELA | ++WASHER |
| 10 | V555000010 | 1 | ++COJINETE DE AGUJAS 10 | ++BEARING, NEEDLE 10 |
| 11 | A011000120 | 1 | MONTAJE DE CIGÜEÑAL | CRANKSHAFT ASSY |
| 12 | 90032303014 | 1 | CHAVETA WOODRUFF 3×14 | KEY, WOODRUFF 3×14 |
| **13** | **P021002471** | **1** | **JUEGO DE CÁRTER** | **CRANKCASE KIT** |
| 14 | 10021305530 | 1 | +SELLO DE ACEITE 12 | +SEAL, OIL 12 |
| 15 | 90081036202 | 1 | +COJINETE DE BALINES 6202 | +BEARING, BALL 6202 |
| 16 | 9403536201 | 1 | +COJINETE DE BALINES 6201 | +BEARING, BALL 6201 |
| 17 | V102000001 | 1 | +EMPAQUETADURA DE CÁRTER | +GASKET, CRANKCASE |
| 18 | 90033040080 | 4 | +PASADOR DE POSICIONAMIENTO 4×8 | +PIN, LOCATING 4×8 |
| 19 | 10021300310 | 1 | +SELLO DE ACEITE | +SEAL, OIL |
| 20 | 90016205035 | 4 | +PERNO M5×35 | +BOLT M5×35 |
| 21 | 90016205020 | 4 | PERNO 5×20 | BOLT 5×20 |
| 22 | G186000010 | 1 | SUJETADOR DE CABLE | HOLDER, CABLE |
| 23 | A172000350 | 1 | CUBIERTA DE VENTILADOR | COVER, FAN |

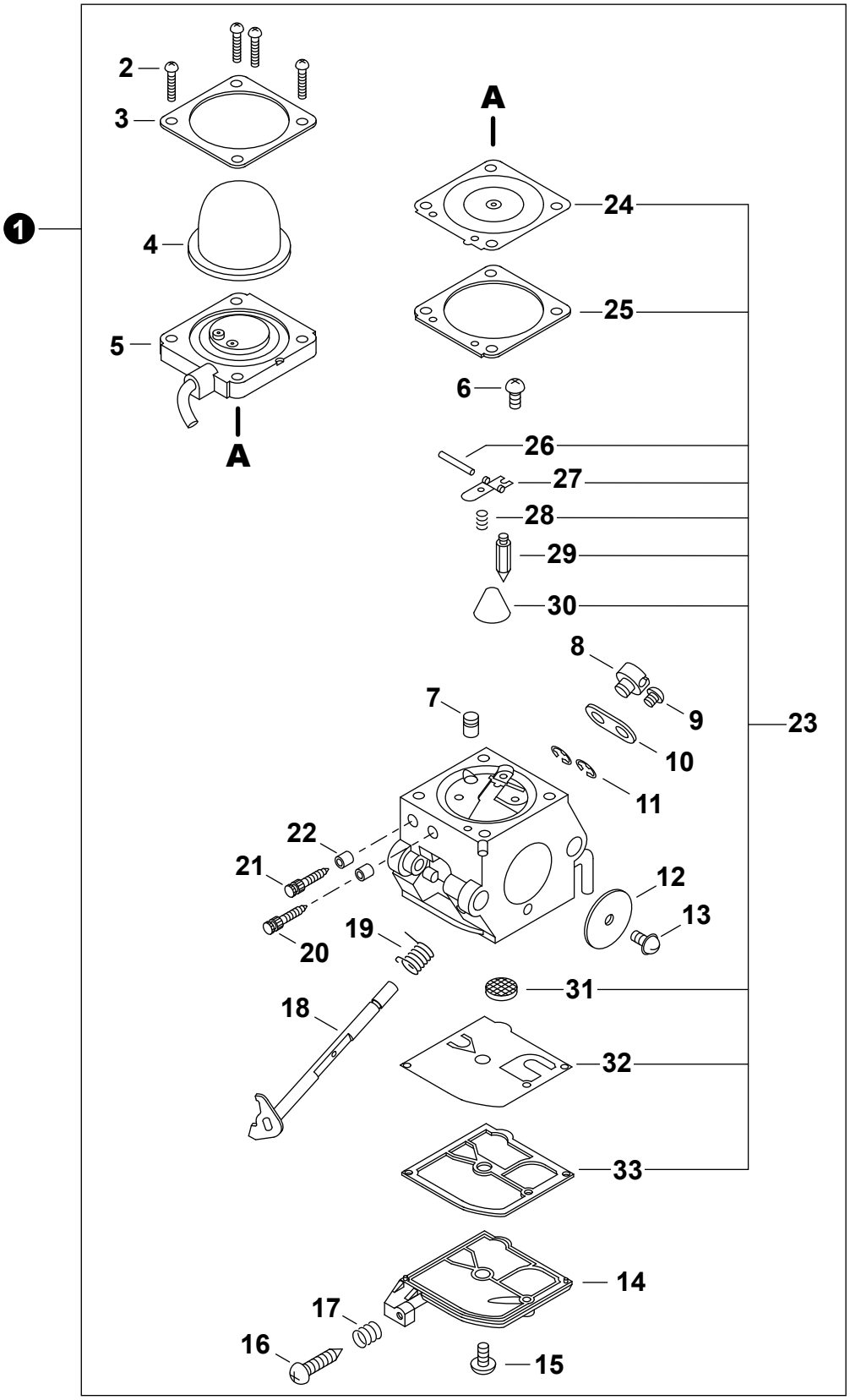
1
2
3
4
5
A
A
24
25
6
26
27
28
29
30
8
9
7
23
10
11
22
21
12
13
20
19
31
18
32
33
14
17
16
15

| NO. | PART NUMBER | QTY. | DESCRIPCIÓN | DESCRIPTION |
|---|---|---|---|---|
| **1** | **A021000685** | **1** | **CARBURADOR - C1Q-K73C** | **CARBURETOR - C1Q-K73C** |
| 2 | P005000980 | 4 | +TORNILLO | +SCREW |
| 3 | P005000620 | 1 | +SUJETADOR DE BULBO DE PURGA | +RETAINER, PURGE BULB |
| 4 | P005003120 | 1 | +BULBO DE PURGA | +BULB, PURGE |
| 5 | P005001680 | 1 | +MONTAJE DE CUERPO DE BOMBA | +BODY ASSY, PUMP |
| 6 | 12533913930 | 1 | +TORNILLO | +SCREW |
| 7 | P005001080 | 1 | +BOQUILLA DE LA VÁLVULA DE RETENCIÓN | +NOZZLE, CHECK VALVE |
| 8 | 12537242030 | 1 | +CONECTOR GIRATORIO | +SWIVEL |
| 9 | 12534813930 | 1 | +TORNILLO | +SCREW |
| 10 | P005001100 | 1 | +PALANCA DE ACELERADOR | +LEVER, THROTTLE |
| 11 | 12532713930 | 2 | +SUJETADOR | +CLIP |
| 12 | P005000810 | 1 | +VÁLVULA DEL ACELERADOR | +VALVE, THROTTLE |
| 13 | 12531413930 | 1 | +TORNILLO | +SCREW |
| 14 | P005001340 | 1 | +TAPA DE LA BOMBA | +COVER, PUMP |
| 15 | 12531013930 | 1 | +TORNILLO | +SCREW |
| 16 | 12534408560 | 1 | +TORNILLO | +SCREW |
| 17 | 12533306960 | 1 | +RESORTE | +SPRING |
| 18 | P005001090 | 1 | +MONTAJE DE EJE ACELERADOR | +SHAFT ASSY, THROTTLE |
| 19 | P005000790 | 1 | +RESORTE | +SPRING |
| 20 | P005001150 | 1 | +AGUJA DE REGULACION BAJA (L) | +NEEDLE, LOW SPEED |
| 21 | P005001160 | 1 | +AGUJA DE REGULACION ALTA (H) | +NEEDLE, HIGH SPEED |
| 22 | 12536312820 | 2 | +SUJETADOR | +RETAINER |
| **23** | **P005003580** | **1** | **+JUEGO DE REPARACIÓN DE CARBURADOR** | **+REPAIR KIT, CARBURETOR** |
| 24 | P005003560 | 1 | ++DIAFRAGMA DE MEDICIÓN | ++DIAPHRAGM, METERING |
| 25 | P005001140 | 1 | ++EMPAQUETADURA DIAFRAGMA DE MEDICIÓN | ++GASKET, METERING DIAPHRAGM |
| 26 | 12533813930 | 1 | ++PASADOR DE PALANCA DE MEDICIÓN | ++PIN, METERING LEVER |
| 27 | 12532308260 | 1 | ++PALANCA DE MEDICIÓN | ++LEVER, METERING |
| 28 | P005001130 | 1 | ++RESORTE | ++SPRING |
| 29 | 12533708260 | 1 | ++VÁLVULA REGULADORA | ++VALVE, INLET NEEDLE |
| 30 | 12534551030 | 1 | ++TAPÓN WELCH | ++PLUG, WELCH |
| 31 | P005000860 | 1 | ++MALLA FILTRADORA | ++SCREEN, FUEL INLET |
| 32 | P005001110 | 1 | ++DIAFRAGMA DE LA BOMBA | ++DIAPHRAGM, PUMP |
| 33 | 12532508360 | 1 | ++EMPAQUETADURA DE LA BOMBA | ++GASKET, PUMP |

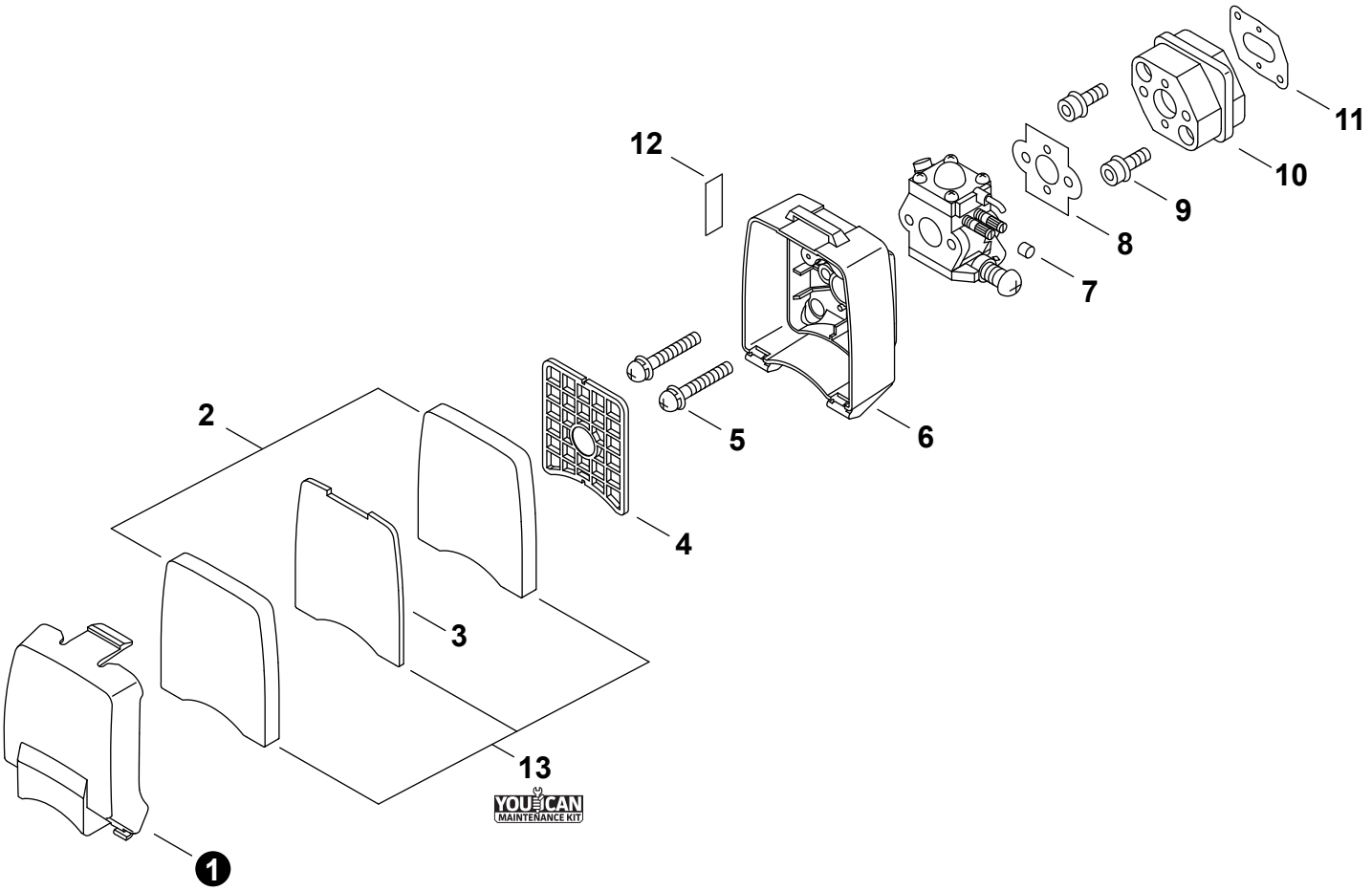


| NO. | PART NUMBER | QTY. | DESCRIPCIÓN | DESCRIPTION |
|---|---|---|---|---|
| 1 | A232000312 | 1 | CUBIERTA DEL FILTRO DE AIRE | COVER, AIR FILTER |
| 2 | A226000300 | 2 | FILTRO DE AIRE - ESPUMA | FILTER, AIR - FOAM |
| 3 | A226000310 | 1 | FILTRO DE AIRE - FIELTRO | FILTER, AIR - FELT |
| 4 | A230000000 | 1 | REJILLA PARA FILTRO DE AIRE | GRID, AIR FILTER |
| 5 | 90024205050 | 2 | TORNILLOS 5×50 | SCREW 5×50 |
| 6 | P021010233 | 1 | CAJA DEL FILTRO DE AIRE | CASE, AIR FILTER |
| 7 | A259000040 | 1 | PROTECTOR DE TORNILLO | CAP, LIMITER |
| 8 | 13001606232 | 1 | EMPAQUETADURA DE CARBURADOR | GASKET, CARBURETOR |
| 9 | 90010605025 | 2 | PERNO 5×25 | BOLT 5×25 |
| 10 | A200000140 | 1 | AISLADOR DE ADMISIÓN | INSULATOR, INTAKE |
| 11 | V103000070 | 1 | EMPAQUETADURA DE ADMISIÓN | GASKET, INTAKE |
| 12 | 89033252730 | 1 | ETIQUETA DEL ESTRANGULADOR | LABEL, CHOKE |
| **13** | **91000Y** | **1** | **JUEGO DE PUESTA A PUNTO - YOUCAN™** | **TUNE-UP KIT - YOUCAN™** |



+ Denota artículo forma parte de una asamblea
++ Denota artículo forma parte de un submontaje

+ Denotes item is part of an assembly
++ Denotes item is part of a sub-assembly

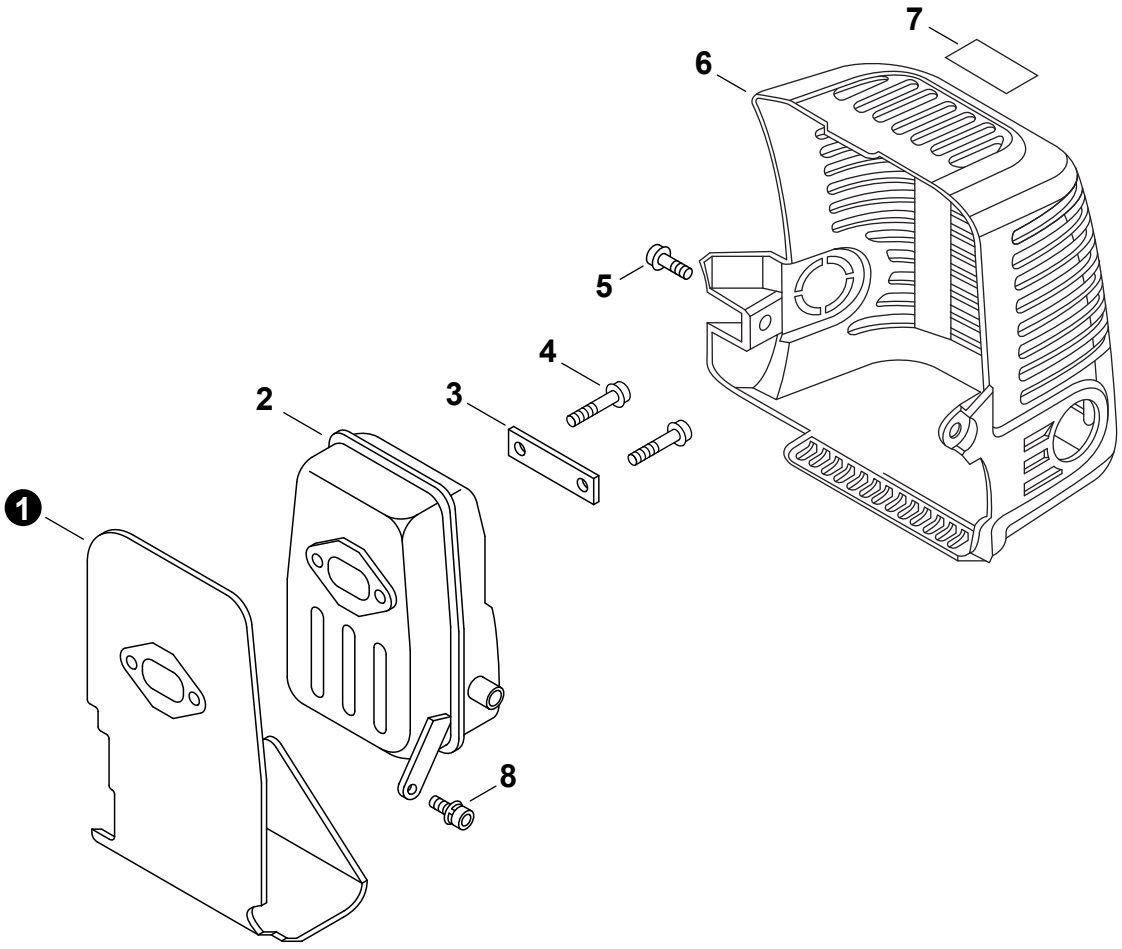


| NO. | PART NUMBER | QTY. | DESCRIPCIÓN | DESCRIPTION |
|---|---|---|---|---|
| 1 | V104000210 | 1 | PROTECTOR TÉRMICO DEL ESCAPE | HEAT SHIELD, EXHAUST |
| 2 | A300000400 | 1 | SILENCIADOR | MUFFLER |
| 3 | V150000550 | 1 | PLACA | PLATE, EYE |
| 4 | 90010506060 | 2 | PERNO 6×60 | BOLT 6×60 |
| 5 | 90010605012 | 1 | PERNO 5×12 | BOLT 5×12 |
| 6 | A320000080 | 1 | CUBIERTA DEL SILENCIADOR | COVER, MUFFLER |
| 7 | X505002310 | 1 | ETIQUETA DE PRECAUCIÓN CALIENTE | LABEL, CAUTION - HOT |
| 8 | 90016205012 | 1 | PERNO 5×12 | BOLT 5×12 |



+ Denota artículo forma parte de una asamblea
++ Denota artículo forma parte de un submontaje

+ Denotes item is part of an assembly
++ Denotes item is part of a sub-assembly

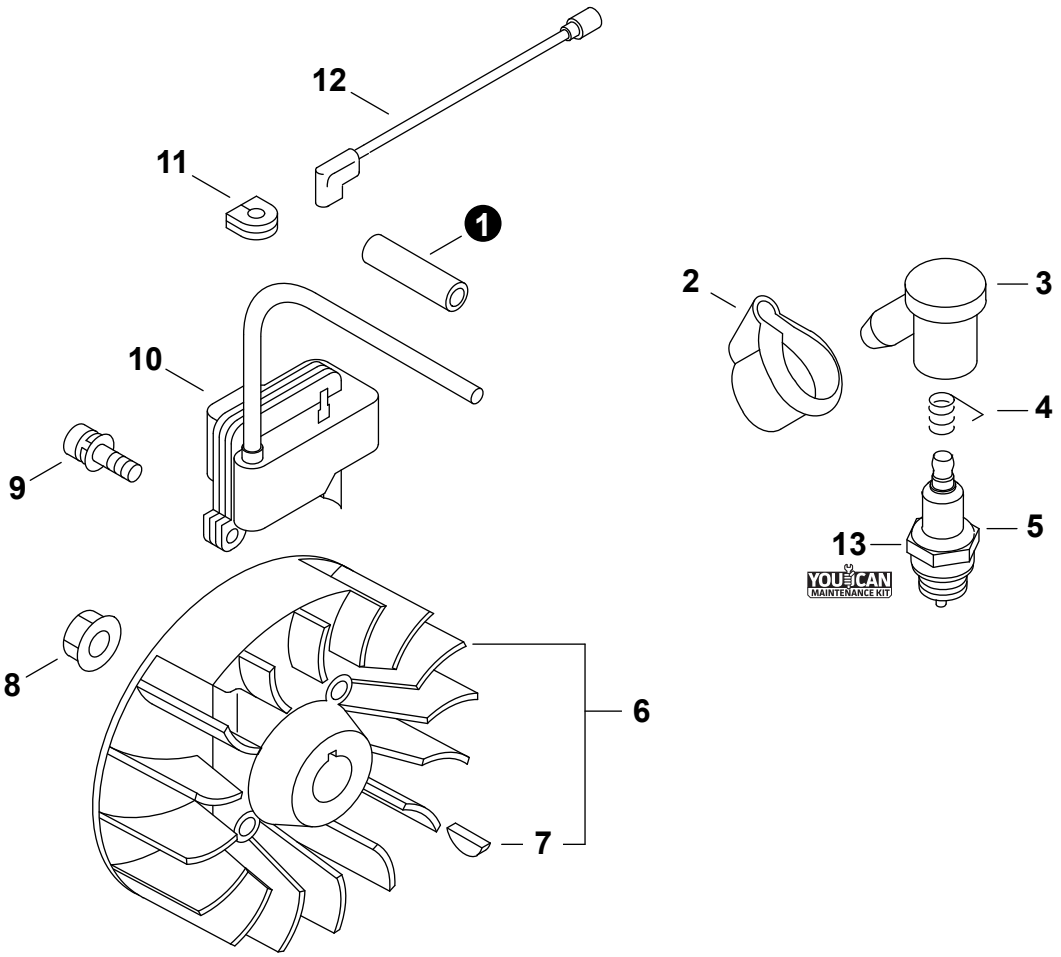


| NO. | PART NUMBER | QTY. | DESCRIPCIÓN | DESCRIPTION |
|---|---|---|---|---|
| 1 | V475001610 | 1 | TUBO AISLANTE 7×8.6×55 | TUBE, INSULATOR 7×8.6×55 |
| 2 | V141000020 | 1 | CUBIERTA ANTIPOLVO | COVER, DUST |
| 3 | A427000000 | 1 | TAPA DE BUJÍA | CAP, SPARK PLUG |
| 4 | A426000000 | 1 | TERMINAL DE BUJÍA | TERMINAL, SPARK PLUG |
| 5 | 15901010630 | 1 | BUJÍA - BPM7A | SPARK PLUG - BPM7A |
| **6** | **P021005911** | **1** | **JUEGO DE VOLANTE** | **FLYWHEEL KIT** |
| 7 | 90032303014 | 1 | +CHAVETA WOODRUFF 3×14 | +KEY, WOODRUFF 3×14 |
| 8 | 90051900010 | 1 | TUERCA-BRIDA 10×1.25 | NUT, FLANGE 10×1.25 |
| 9 | 90016205020 | 2 | PERNO 5×20 | BOLT 5×20 |
| 10 | A411000050 | 1 | BOBINA DE ENCENDIDO | COIL, IGNITION |
| 11 | 15611404920 | 1 | OJAL | GROMMET |
| 12 | 16201055630 | 1 | CABLE CONDUCTOR 170 MM | LEAD 170 MM |
| **13** | **91000Y** | **1** | **JUEGO DE PUESTA A PUNTO - YOUCAN™** | **TUNE-UP KIT - YOUCAN™** |



+ Denota artículo forma parte de una asamblea
++ Denota artículo forma parte de un submontaje

+ Denotes item is part of an assembly
++ Denotes item is part of a sub-assembly

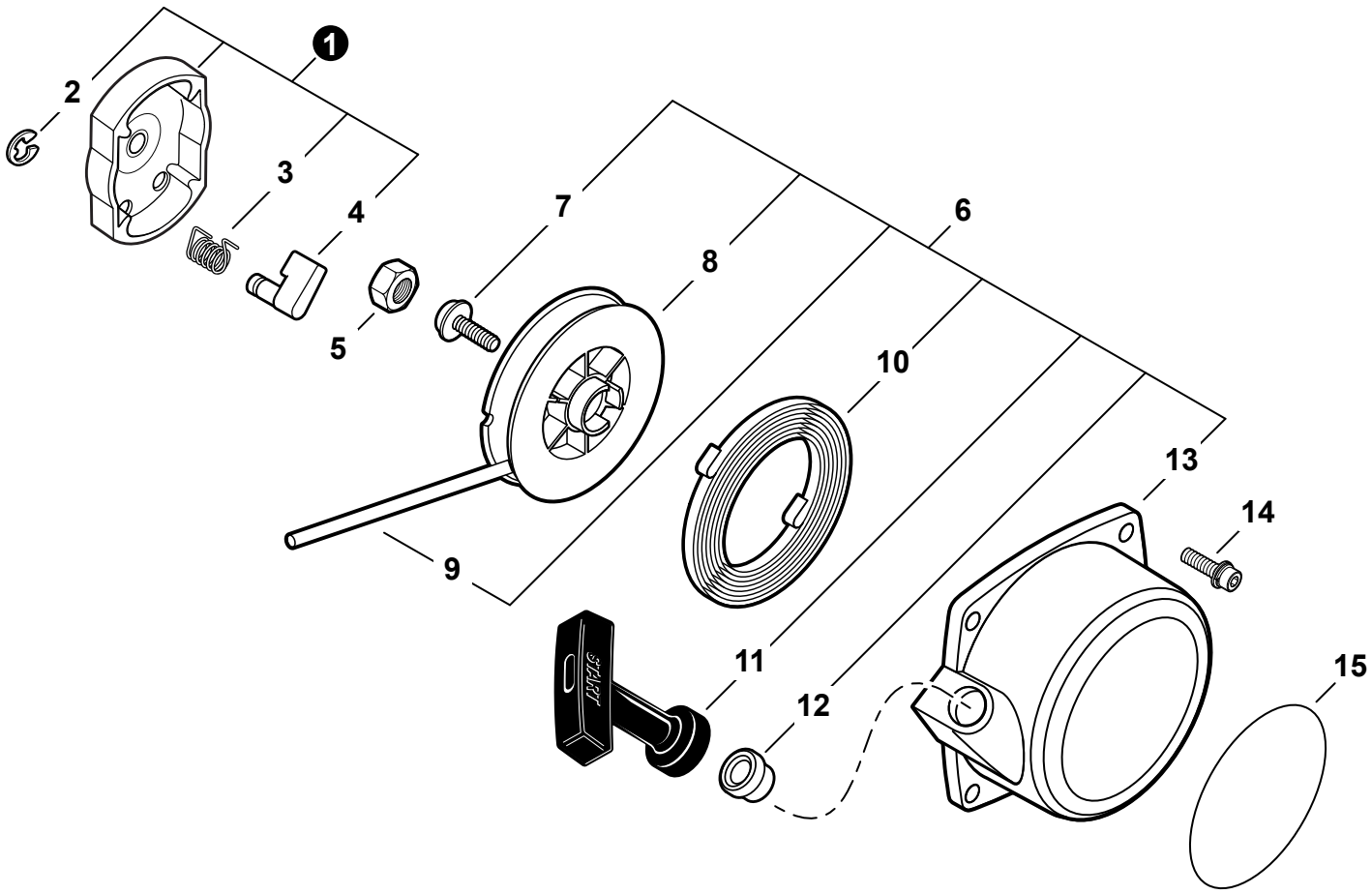


| NO. | PART NUMBER | QTY. | DESCRIPCIÓN | DESCRIPTION |
|---|---|---|---|---|
| **1** | **A052000011** | **1** | **MONTAJE DE POLEA DEL ARRANCADOR** | **PULLEY ASSY, STARTER** |
| 2 | P022002100 | 1 | +RETENEDOR TIPO "E" 4 | +E-RING 4 |
| 3 | 17723440630 | 1 | +RESORTE DE RETORNO | +SPRING, RETURN |
| 4 | A514000120 | 1 | +TRINQUETE | +PAWL, STARTER |
| 5 | 90050200008 | 1 | TUERCA 8×1.25 | NUT 8×1.25 |
| **6** | **A051000070** | **1** | **MONTAJE DE ARRANCADOR AUTORRETRÁCTIL** | **STARTER ASSY, RECOIL** |
| 7 | 17723606910 | 1 | +TORNILLO | +SCREW |
| 8 | P022002080 | 1 | +CARRETE DEL CABLE | +REEL, ROPE |
| 9 | 17722606310 | 1 | +CUERDA DEL ARRANCADOR 3.8×1150 | +ROPE, STARTER 3.8×1150 |
| 10 | 17722006310 | 1 | +RESORTE RECULAR | +SPRING, RECOIL |
| 11 | 17722827030 | 1 | +AGARRE DEL ARRANCADOR | +GRIP, STARTER |
| 12 | 17722742030 | 1 | +GUÍA DE CUERDA | +GUIDE, ROPE |
| 13 | P022043270 | 1 | +CAJA DE ARRANQUE | +CASE, STARTER |
| 14 | 90010605020 | 2 | PERNO 5×20 | BOLT 5×20 |
| 15 | X502000900 | 1 | ETIQUETA ARRANCADOR | LABEL, RECOIL STARTER |

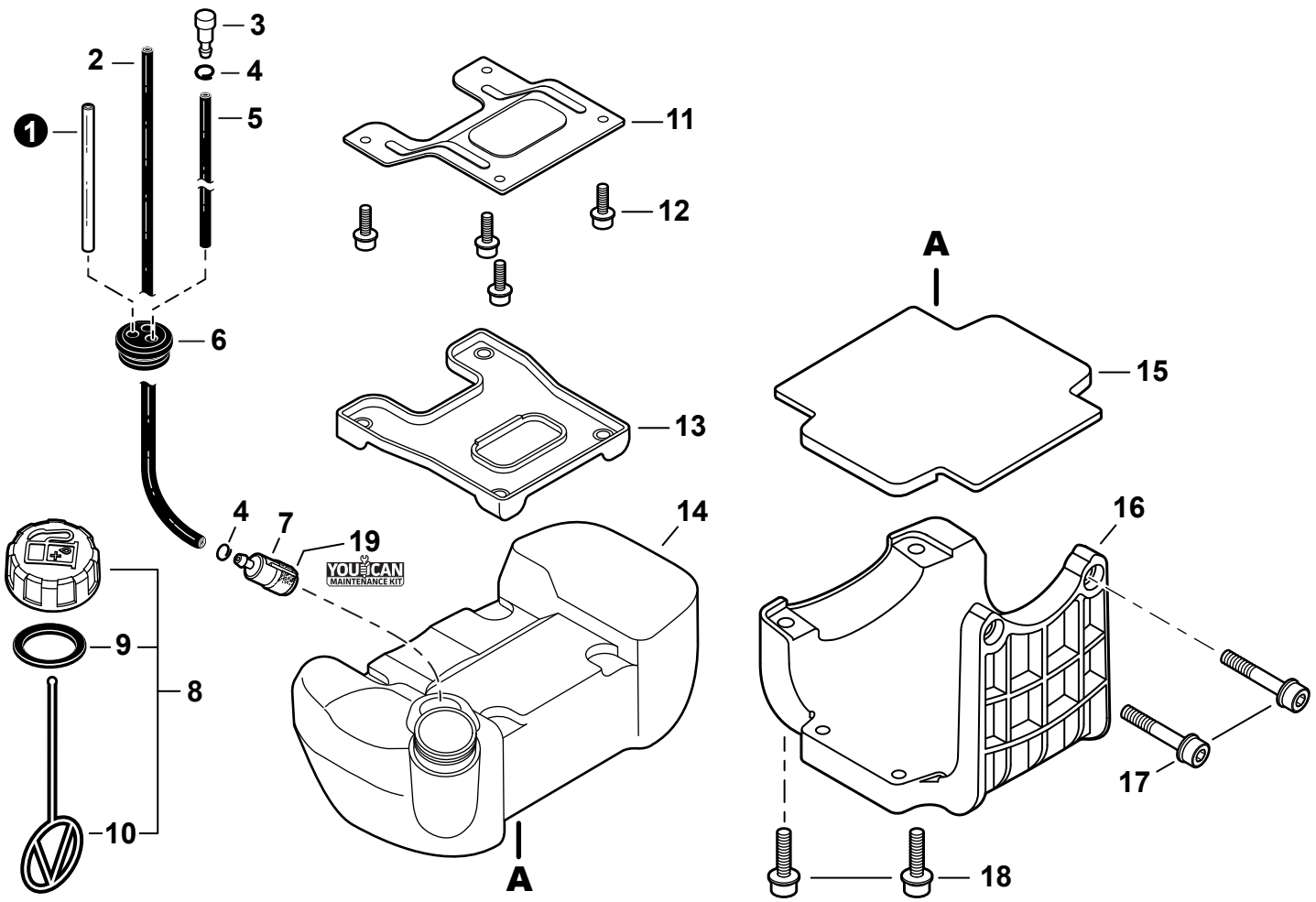


| NO. | PART NUMBER | QTY. | DESCRIPCIÓN | DESCRIPTION |
|---|---|---|---|---|
| 1 | V471000630 | 1 | TUBO DE COMBUSTIBLE 3×6×120 TRANSPARENTE | PIPE, FUEL 3×6×120 CLEAR |
| 2 | 13201035431 | 1 | TUBO DE COMBUSTIBLE 3×6×230 | PIPE, FUEL 3×6×230 |
| 3 | 13130056431 | 1 | VÁLVULA DE RESPIRADERO | VENT ASSY |
| 4 | V490001230 | 2 | SUJETADOR Ø6.5 MM | CLIP Ø6.5 MM |
| 5 | 13201202961 | 1 | TUBO DE COMBUSTIBLE 3×6×120 NEGRO | PIPE, FUEL 3×6×120 BLACK |
| 6 | 13211555931 | 1 | OJAL DE COMBUSTIBLE | GROMMET, FUEL |
| 7 | A369000440 | 1 | FILTRO DE COMBUSTIBLE | FILTER, FUEL |
| **8** | **P100006640** | **1** | **MONTAJE DE TAPA DE COMBUSTIBLE** | **CAP ASSY, FUEL** |
| 9 | V107000190 | 1 | +EMPAQUETADURA DE TAPA DE COMBUSTIBLE | +GASKET, FUEL CAP |
| 10 | 13105156030 | 1 | +CONECTOR DE TAPA L= 100 MM | +CONNECTOR, CAP L= 100 MM |
| 11 | A393000030 | 1 | ABRAZADERA TANQUE DE COMBUSTIBLE | BRACKET, FUEL TANK |
| 12 | 90010605012 | 4 | PERNO 5×12 | BOLT 5×12 |
| 13 | A390000000 | 1 | AMORTIGUADOR SUPERIOR | CUSHION, UPPER |
| 14 | A350000131 | 1 | TANQUE DE COMBUSTIBLE | TANK, FUEL |
| 15 | A390000010 | 1 | AMORTIGUADOR DEL TANQUE DE COMBUSTIBLE | CUSHION, FUEL TANK |
| 16 | A393000050 | 1 | PROTECTOR, TANQUE DE COMBUSTIBLE | GUARD, FUEL TANK |
| 17 | 90010605025 | 2 | PERNO 5×25 | BOLT 5×25 |
| 18 | 90010605020 | 2 | PERNO 5×20 | BOLT 5×20 |
| **19** | **91000Y** | **1** | **JUEGO DE PUESTA A PUNTO - YOUCAN™** | **TUNE-UP KIT - YOUCAN™** |



+ Denota artículo forma parte de una asamblea
++ Denota artículo forma parte de un submontaje

+ Denotes item is part of an assembly
++ Denotes item is part of a sub-assembly

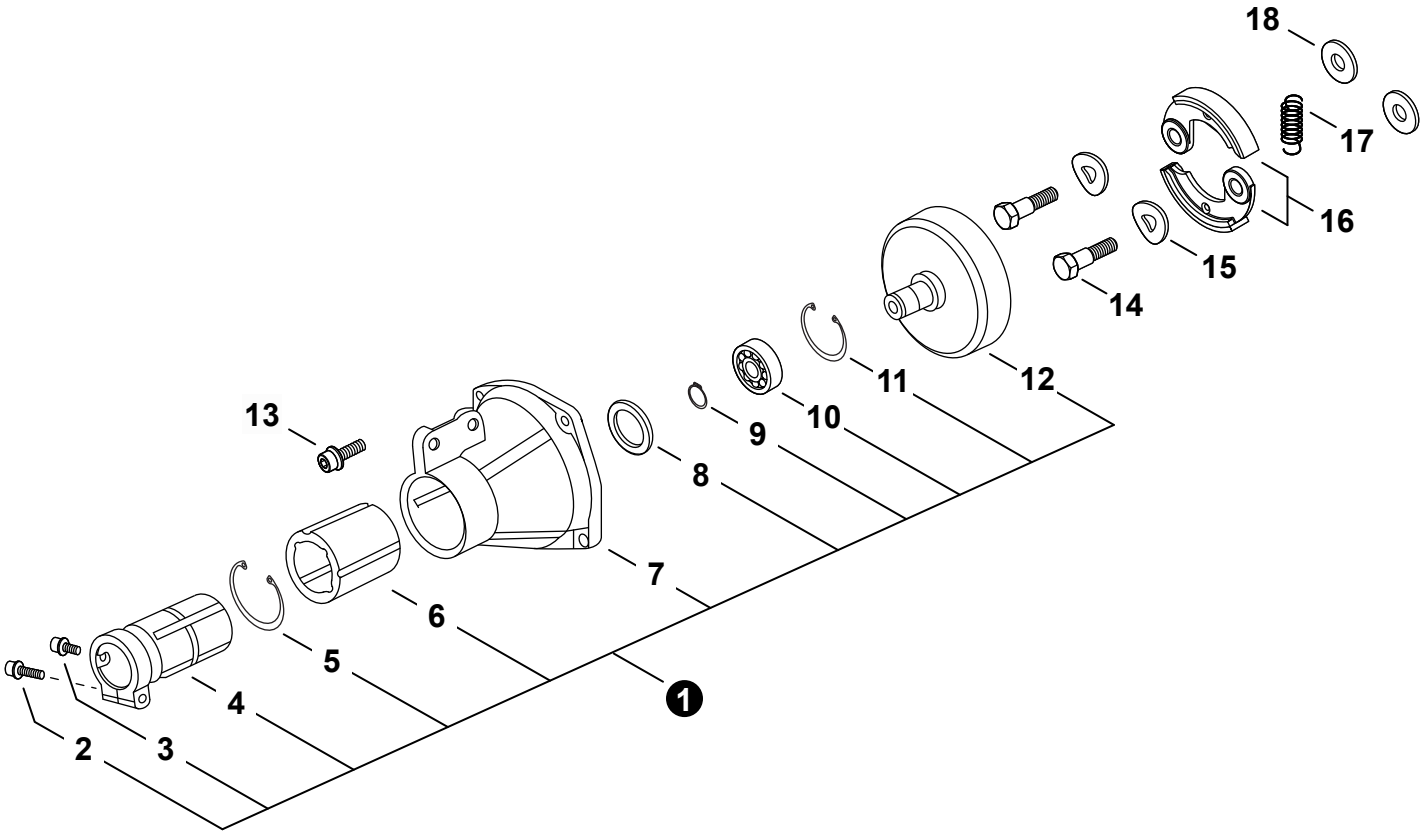


| NO. | PART NUMBER | QTY. | DESCRIPCIÓN | DESCRIPTION |
|---|---|---|---|---|
| **1** | **P022037010** | **1** | **MONTAJE DE CAJA DEL EMBRAGUE** | **CASE ASSY, CLUTCH** |
| 2 | 9111805025 | 1 | +PERNO 5×25 | +BOLT 5×25 |
| 3 | 9111805012 | 1 | +PERNO 5×12 | +BOLT 5×12 |
| 4 | P022026330 | 1 | +JUNTA | +JOINT |
| 5 | P022006950 | 1 | +ANILLO RETENEDOR | +RING, SNAP |
| 6 | P022006940 | 1 | +AMORTIGUADOR | +CUSHION |
| 7 | P022006870 | 1 | +CAJA DEL EMBRAGUE | +CASE, CLUTCH |
| 8 | P022006880 | 1 | +PLACA | +PLATE |
| 9 | P022006920 | 1 | +ANILLO RETENEDOR | +RING, SNAP |
| 10 | 90080406002 | 1 | +COJINETE DE BALINES | +BEARING, BALL |
| 11 | P022006900 | 1 | +ANILLO RETENEDOR | +RING, SNAP |
| 12 | P022006910 | 1 | +TAMBOR EMBRAGUE | +DRUM, CLUTCH |
| 13 | P022007220 | 4 | PERNO | BOLT |
| 14 | 17504606230 | 2 | PERNO DE EMBRAGUE | BOLT, CLUTCH |
| 15 | 17504803920 | 2 | ARANDELA 10.2×18×1.0 | WASHER 10.2×18×1.0 |
| 16 | P021006200 | 1 | JUEGO DE ZAPATA DE EMBRAGUE | SHOE SET, CLUTCH |
| 17 | 17501842230 | 1 | RESORTE DEL EMBRAGUE | SPRING, CLUTCH |
| 18 | 17504903920 | 2 | ARANDELA 8.2×17×1.6 | WASHER 8.2×17×1.6 |

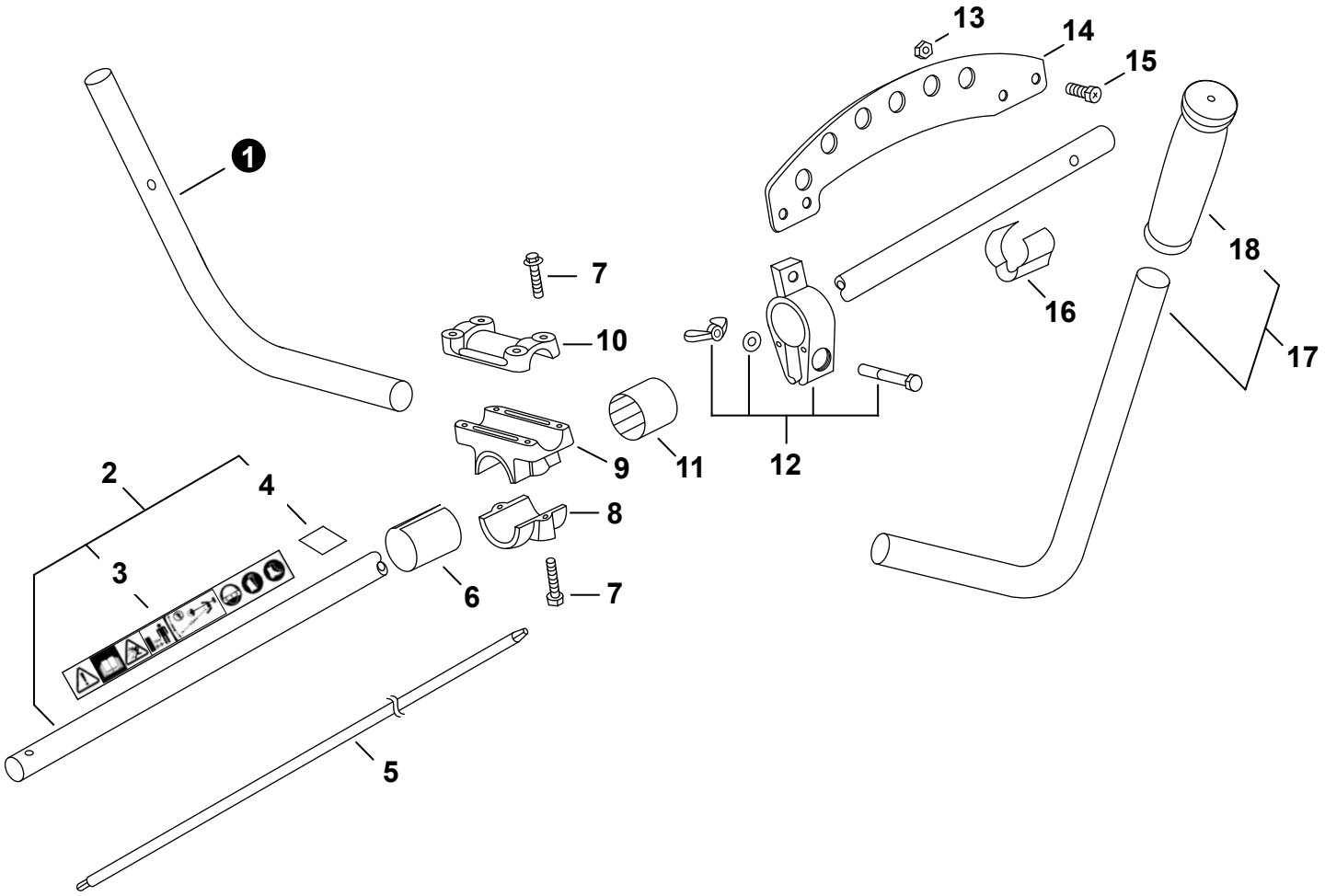


| NO. | PART NUMBER | QTY. | DESCRIPCIÓN | DESCRIPTION |
|---|---|---|---|---|
| 1 | P022024740 | 1 | MANGO DERECHO | HANDLE, RIGHT |
| **2** | **P050010430** | **1** | **MONTAJE DE TUBO PRINCIPAL** | **MAIN PIPE ASSY** |
| 3 | P022007070 | 1 | +ETIQUETA DE PRECAUCIÓN - ISO | +LABEL, CAUTION - ISO |
| 4 | P022035840 | 1 | +ETIQUETA | +LABEL |
| 5 | P022006980 | 1 | EJE DE TRANSMISIÓN | DRIVESHAFT |
| 6 | P022007120 | 1 | ESPACIADOR | SPACER |
| 7 | P022007110 | 6 | PERNO | BOLT |
| 8 | P022024750 | 1 | SOPORTE DE MONTAJE | BRACKET, MOUNTING |
| 9 | P022007090 | 1 | ABRAZADERA INFERIOR | BRACKET, LOWER |
| 10 | P022007081 | 1 | ABRAZADERA SUPERIOR | BRACKET, UPPER |
| 11 | P022007030 | 1 | ESPACIADOR | SPACER |
| 12 | P022007020 | 1 | MONTAJE DE ABRAZADERA | CLAMP ASSY |
| 13 | P022007010 | 3 | TUERCA M6 | NUT M6 |
| 14 | P022006990 | 1 | COLGADOR | HANGER |
| 15 | P022007000 | 3 | PERNO M6 | BOLT M6 |
| 16 | P022007210 | 1 | SUJETADOR DE CABLE | HOLDER, CABLE |
| **17** | **P022024730** | **1** | **MONTAJE DE MANGO IZQUIERDO** | **HANDLE ASSY, LEFT** |
| 18 | P022007140 | 1 | +AGARRE | +GRIP |



+ Denota artículo forma parte de una asamblea
++ Denota artículo forma parte de un submontaje

+ Denotes item is part of an assembly
++ Denotes item is part of a sub-assembly

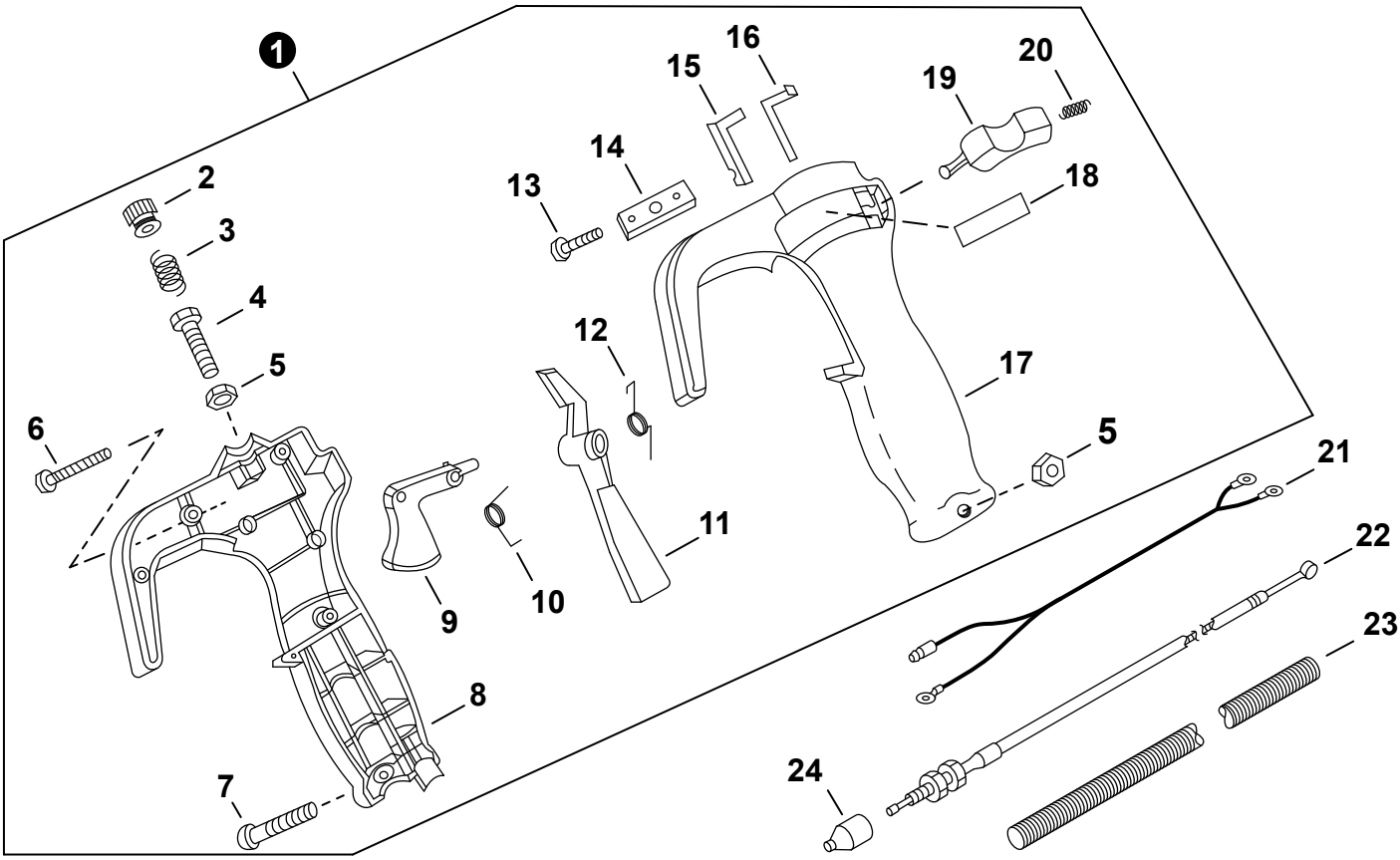


| NO. | PART NUMBER | QTY. | DESCRIPCIÓN | DESCRIPTION |
|---|---|---|---|---|
| 1 | **P022007230** | 1 | **MONTAJE DE CONTROL DE ACELERADOR** | **THROTTLE CONTROL ASSY** |
| 2 | P022007300 | 1 | +PERILLA | +KNOB |
| 3 | P022007360 | 1 | +RESORTE | +SPRING |
| 4 | P022007400 | 1 | +PERNO | +BOLT |
| 5 | P022007390 | 2 | +TUERCA | +NUT |
| 6 | P022007370 | 4 | +TORNILLO | +SCREW |
| 7 | P022007380 | 1 | +TORNILLO | +SCREW |
| 8 | P022007240 | 1 | +AGARRE DERECHO | +GRIP, RIGHT |
| 9 | P022007260 | 1 | +GATILLO DEL ACELERADOR | +TRIGGER, THROTTLE |
| 10 | P022007310 | 1 | +RESORTE | +SPRING |
| 11 | P022007270 | 1 | +SEGURO DEL ACELERADOR | +LOCKOUT, THROTTLE |
| 12 | P022007320 | 1 | +RESORTE | +SPRING |
| 13 | P022007410 | 1 | +TORNILLO | +SCREW |
| 14 | P022007290 | 1 | +SOPORTE | +HOLDER |
| 15 | P022007330 | 1 | +RESORTE | +SPRING |
| 16 | P022007340 | 1 | +RESORTE | +SPRING |
| 17 | P022007250 | 1 | +AGARRE IZQUIERDO | +GRIP, LEFT |
| 18 | P022007420 | 1 | +ETIQUETA ENCENDIDO-APAGADO | +LABEL, STOP-START |
| 19 | P022007280 | 1 | +INTERRUPTOR DE ENCENDIDO-APAGADO | +SWITCH, START-STOP |
| 20 | P022007350 | 1 | +RESORTE | +SPRING |
| 21 | P022007440 | 1 | CABLE CONDUCTOR | LEAD |
| 22 | V430004540 | 1 | CABLE DEL ACELERADOR | CABLE, THROTTLE |
| 23 | P022007450 | 1 | TUBO FLEXIBLE | TUBE, FLEXIBLE |
| 24 | V494000080 | 1 | TAPA ANTIPOLVO | CAP, DUST |



+ Denota artículo forma parte de una asamblea
++ Denota artículo forma parte de un submontaje

+ Denotes item is part of an assembly
++ Denotes item is part of a sub-assembly

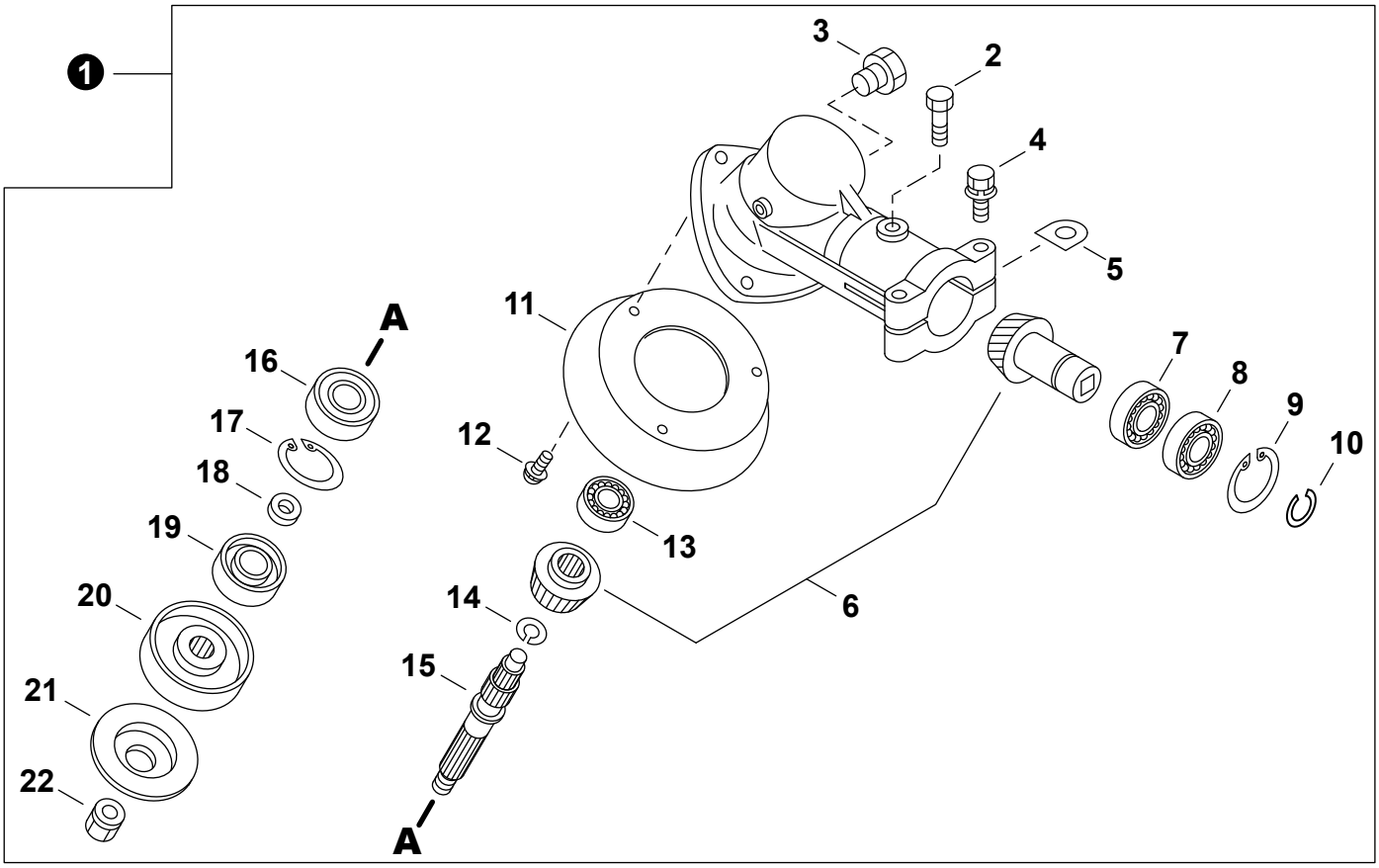


| NO. | PART NUMBER | QTY. | DESCRIPCIÓN | DESCRIPTION |
|---|---|---|---|---|
| 1 | **C051001130** | 1 | **MONTAJE DE CAJA DE ENGRANAJES** | **GEAR CASE ASSY** |
| 2 | P022007060 | 1 | +PERNO | +BOLT |
| 3 | 61043450031 | 1 | +PERNO M8×8 | +BOLT M8×8 |
| 4 | P022007050 | 2 | +PERNO M5×30 | +BOLT M5×30 |
| 5 | 61023904130 | 2 | +ARANDELA D | +D-WASHER |
| 6 | P022007460 | 1 | +JUEGO DE ENGRANAJES | +GEAR SET |
| 7 | 90080036001 | 1 | +COJINETE DE BALINES 6001 | +BEARING, BALL 6001 |
| 8 | 90080706001 | 1 | +COJINETE DE BALINES 6001 | +BEARING, BALL 6001 |
| 9 | 90070200028 | 1 | +ANILLO RETENEDOR 28 | +RING, SNAP 28 |
| 10 | 90070100012 | 1 | +ANILLO RETENEDOR 12 | +RING, SNAP 12 |
| 11 | C536000030 | 1 | +TAPA CAJA DE ENGRANAJES | +COVER, GEAR CASE |
| 12 | 90024205022 | 3 | +TORNILLO 5×22 | +SCREW 5×22 |
| 13 | 90080036000 | 1 | +COJINETE DE BALINES 6000 | +BEARING, BALL 6000 |
| 14 | 90070600012 | 1 | +ANILLO RETENEDOR Ø12 | +RING, SNAP Ø12 |
| 15 | 61031005730 | 1 | +EJE DE ENGRANAJE | +SHAFT, GEAR |
| 16 | 90081006201 | 1 | +COJINETE DE BALINES 6201 | +BEARING, BALL 6201 |
| 17 | 90070200032 | 1 | +ANILLO RETENEDOR Ø32 | +RING, SNAP Ø32 |
| 18 | 61031507130 | 1 | +ESPACIADOR 11.8×15×9 | +SPACER 11.8×15×9 |
| 19 | 61041307130 | 1 | +SELLO DE ACEITE 22 | +SEAL, OIL 22 |
| 20 | 61031307132 | 1 | +PLACA DEL ADAPTADOR SUPERIOR | +PLATE, ADAPTOR - UPPER |
| 21 | 61031421231 | 1 | +PLACA DEL ADAPTADOR INFERIOR | +PLATE, ADAPTOR - LOWER |
| 22 | 61032027430 | 1 | +TUERCA | +NUT |



+ Denota artículo forma parte de una asamblea
++ Denota artículo forma parte de un submontaje

+ Denotes item is part of an assembly
++ Denotes item is part of a sub-assembly

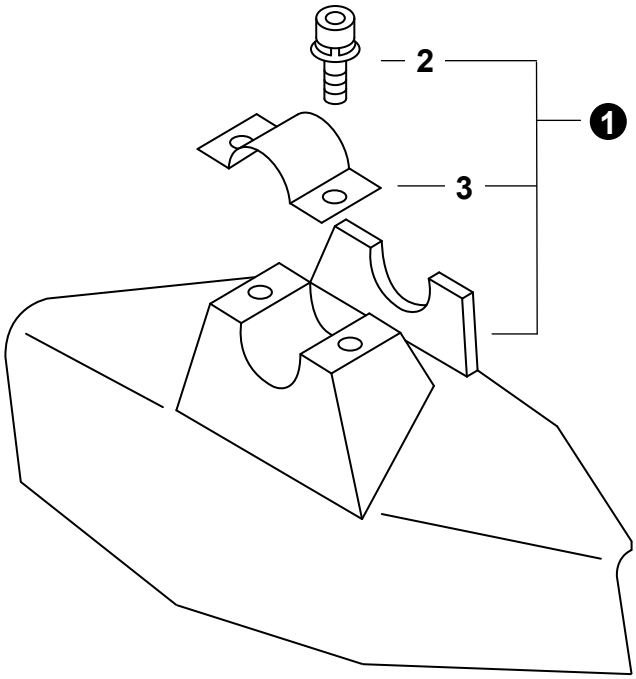


| NO. | PART NUMBER | QTY. | DESCRIPCIÓN | DESCRIPTION |
|---|---|---|---|---|
| 1 | P022007160 | 1 | MONTAJE DE PROTECTOR CONTRA RESIDUOS | DEBRIS SHIELD ASSY |
| 2 | P022007470 | 2 | +PERNO M6×28 | +BOLT M6×28 |
| 3 | P022007480 | 1 | +ABRAZADERA | +CLAMP |

## Arnés
Harness

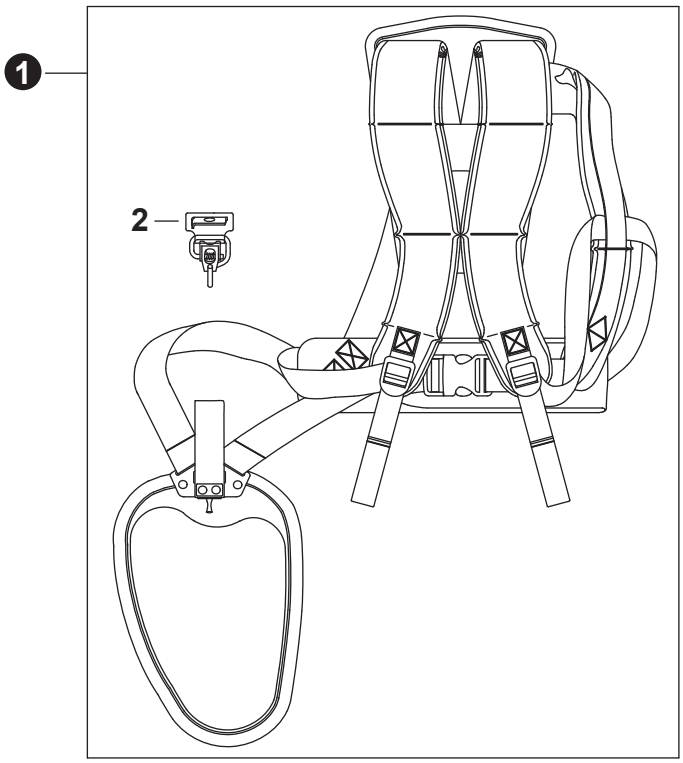


| NO. | PART NUMBER | QTY. | DESCRIPCIÓN | DESCRIPTION |
|---|---|---|---|---|
| 1 | C062000550 | 1 | MONTAJE DE ARNÉS | HARNESS ASSY |
| 2 | P021042910 | 1 | +GANCHO | +HOOK, SNAP |

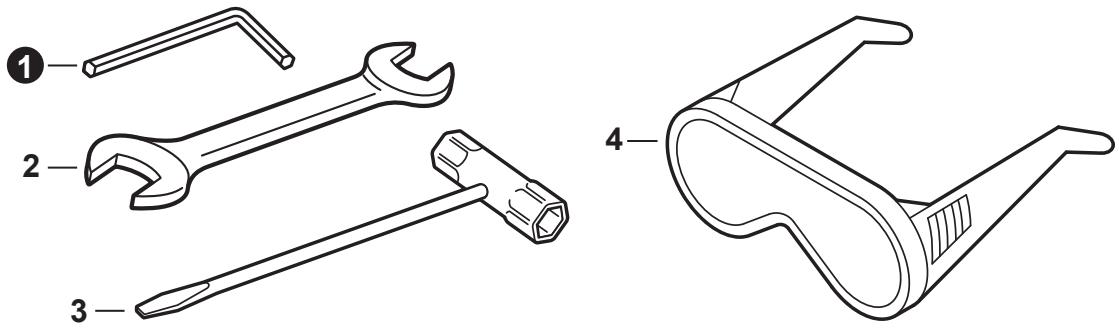


| NO. | PART NUMBER | QTY. | DESCRIPCIÓN | DESCRIPTION |
|---|---|---|---|---|
| 1 | P022007190 | 1 | LLAVE ALLEN M5 | WRENCH, ALLEN M5 |
| 2 | P022007200 | 1 | LLAVE DE TUERCAS 8×10 | SPANNER 8×10 |
| 3 | P022007180 | 1 | LLAVE EN T 17×19 | T-WRENCH 17×19 |
| 4 | X690000080 | 1 | ANTEOJOS DE SEGURIDAD | GLASSES, SAFETY |

## Juegos de mantenimiento
Maintenance Kits

| NO. | PART NUMBER | QTY. | DESCRIPCIÓN | DESCRIPTION |
|---|---|---|---|---|
| **1** | **91000Y** | **1** | **JUEGO DE PUESTA A PUNTO - YOUCAN™** | **TUNE-UP KIT - YOUCAN™** |
| 2 | A226000300 | 2 | +FILTRO DE AIRE - ESPUMA | +FILTER, AIR - FOAM |
| 3 | A226000310 | 1 | +FILTRO DE AIRE - FIELTRO | +FILTER, AIR - FELT |
| 4 | A369000440 | 1 | +FILTRO DE COMBUSTIBLE | +FILTER, FUEL |
| 5 | 15901010630 | 1 | +BUJÍA - BPM7A | +SPARK PLUG - BPM7A |



+ Denota artículo forma parte de una asamblea
++ Denota artículo forma parte de un submontaje

+ Denotes item is part of an assembly
++ Denotes item is part of a sub-assembly