PARTS CATALOG

SOUTH AMERICA
TRIMMER/ BRUSH CUTTER
SRM-2305U
SRM-2455U

ECHO, INCORPORATED
400 OAKWOOD ROAD
LAKE ZURICH, ILLINOIS 60047
WWW.ECHO-USA.COM

©2002 ECHO, Incorporated. All Rights Reserved

11/11/02

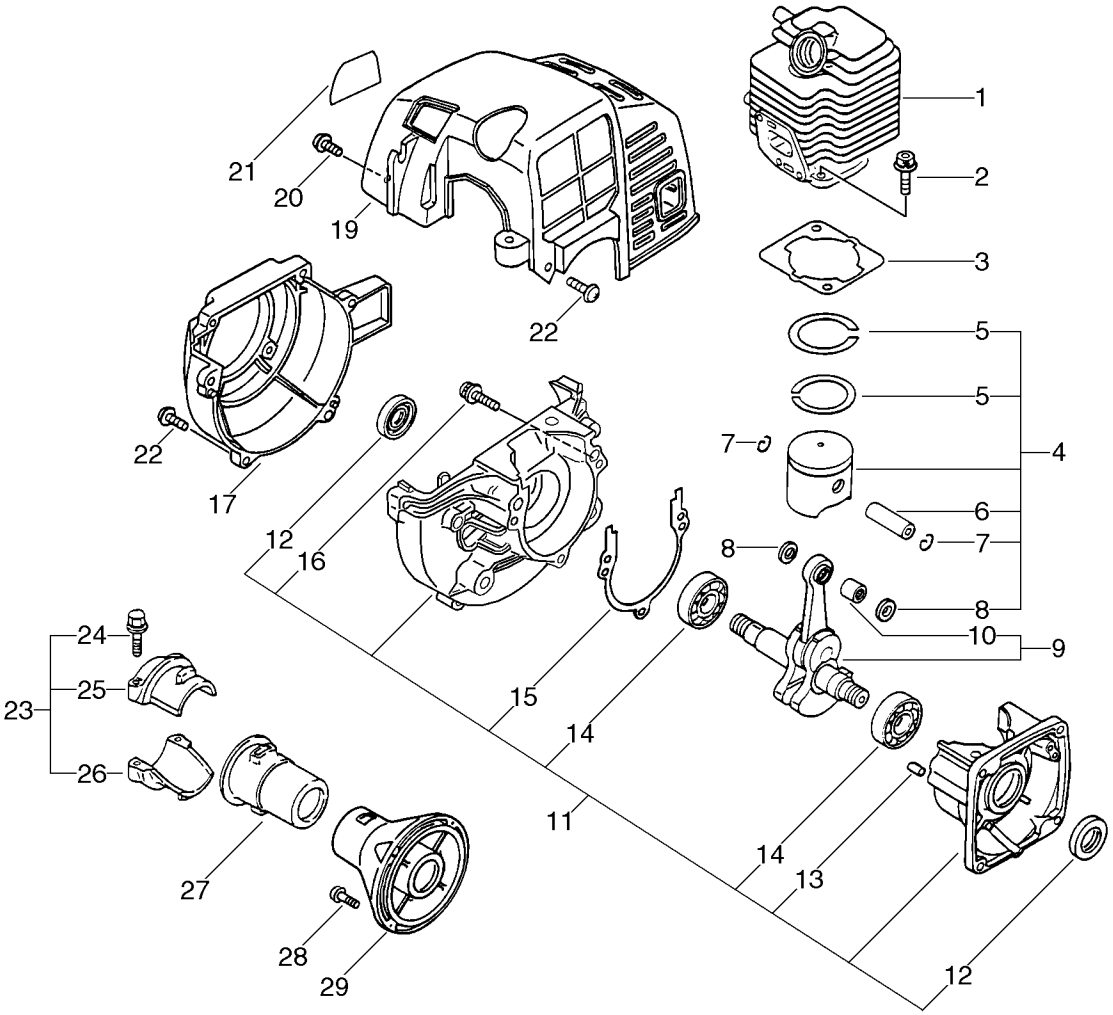
1
2
3
4
5
5
6
7
7
8
8
9
10
11
12
12
13
14
14
15
16
17
19
20
21
22
22
22
23
24
25
26
27
28
29

ENGINE, CRANKCASE, ENGINE COVER — SRM-2305, 2455

KEY		PART NUMBER	QTY	DESCRIPTION	REMARKS
1		10101106562	1	CYLINDER	SRM-2305
1		10101108961	1	CYLINDER (CR)	SRM-2455
2		90016205022	2	BOLT, H.S. 5*22	
3		10101044332	1	GASKET, CYL. BASE	
4		10000048732	1	PISTON KIT	SRM-2305
4		10000009563	1	PISTON KIT	SRM-2455
5	+	10001105330	2	RING, PISTON	SRM-2305
5	+	10001109560	2	RING, PISTON	SRM-2455
6	+	10001311520	1	PIN, PISTON	SRM-2305
6	+	10001311520	1	PIN, PISTON	SRM-2455
7	+	10001504630	2	CIRCLIP, PISTON PIN	SRM-2305
7	+	10001504630	2	CIRCLIP, PISTON PIN	SRM-2455
8	+	10001411520	2	SPACER, PISTON PIN	SRM-2305
8	+	10001411520	2	SPACER, PISTON PIN	SRM-2455
9		10010044733	1	CRANKSHAFT	SRM-2305
9		A011000101	1	CRANKSHAFT,ASM	SRM-2455
10	+	10001251230	1	BEARING, NEEDLE	SRM-2305
10	+	V553000010	1	BEARING,NEEDLE 8	SRM-2455
11		10020452130	1	CRANKCASE KIT	
12	+	10021242030	2	OILSEAL	
13	+	10021503930	2	PIN, DOWEL	
14	+	9403536201	2	BEARING BALL	
15	+	10024242030	1	GASKET, CRANKCASE	
16	+	90016205028	3	BOLT, H.S. 5*28	
17		10151144730	1	COVER, FAN (BS)	
19		10151442031	1	COVER, CYLINDER	
20		90023804012	2	SCREW 4*12	
21		89011256830	1	LABEL, MODEL	SRM-2305
21		89061152130	1	LABEL, MODEL	SRM-2455
22		90023804016	6	SCREW 4*16	
23		61090327432	1	HOLDER KIT	
24	+	90016205025	2	BOLT, H.S. 5*25	
25	+	61092227432	4	HOLDER	
26	+	61092327432	1	HOLDER	
27		61091027832	1	CUSHION	
28		90023805016	4	SCREW 5*16	
29		61022344730	1	CASE, CLUTCH (BS)	

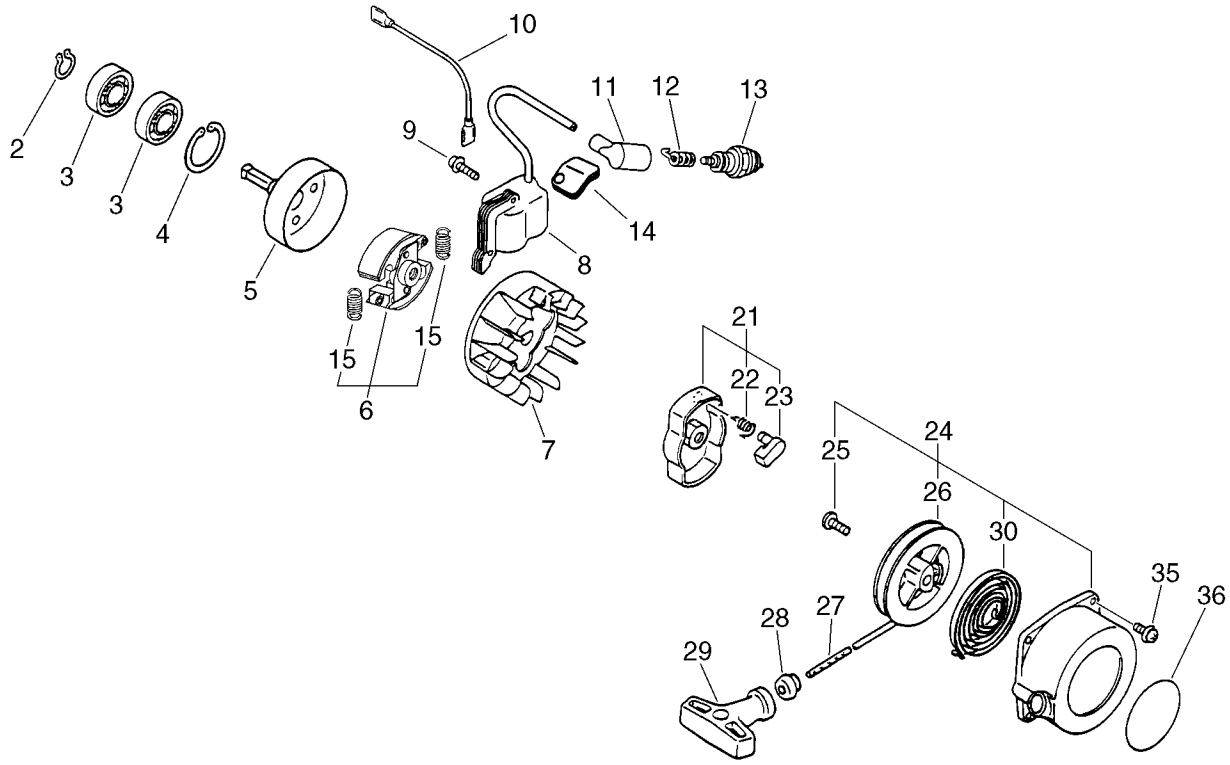
2
3
3
4
5
6
7
8
9
10
11
12
13
14
15
15
21
22
23
24
25
26
27
28
29
30
35
36

IGNITION, CLUTCH, STARTER **SRM-2305, 2455**

KEY		PART NUMBER	QTY	DESCRIPTION	REMARKS
2		90070100012	1	CIRCLIP 12	
3		90080706001	2	BEARING, BALL 6001	
4		90070200028	1	CIRCLIP 28	
5		17500547630	1	DRUM, CLUTCH	
6		17500052732	1	CLUTCH ASY	
7		15680144731	1	FLYWHEEL	
8		15660152130	1	COIL, IGNITION	
9		90016204022	2	BOLT, H.S. 4*22	
10		16201052830	1	LEAD, GROUND	
11		15901203433	1	CAP, SPARK PLUG	
12		15901103432	1	COIL, SPARK PLUG CAP	
13		15901710230	1	PLUG, SPARK (RCJ-7Y)	
14		15011242030	1	BUSHING	
15	+	17501852131	2	SPRING, CLUTCH	
21		17720244330	1	PAWL ASSY, STARTER	
22	+	17723442030	1	SPRING, RETURN	
23	+	17721844330	1	PAWL, STARTER	
24		17720042033	1	STARTER ASSY	
25	+	17723644330	1	SCREW	
26	+	17721544430	1	DRUM, STARTER	
27	+	17722610120	1	ROPE, STARTER	
28	+	17722742030	1	GUIDE, ROPE	
29	+	17722806530	1	GRIP, STARTER	
30	+	17722042030	1	SPRING, REWIND	
35		90023804016	2	SCREW 4*16	
36		89011849130	1	LABEL, ECHO	6626

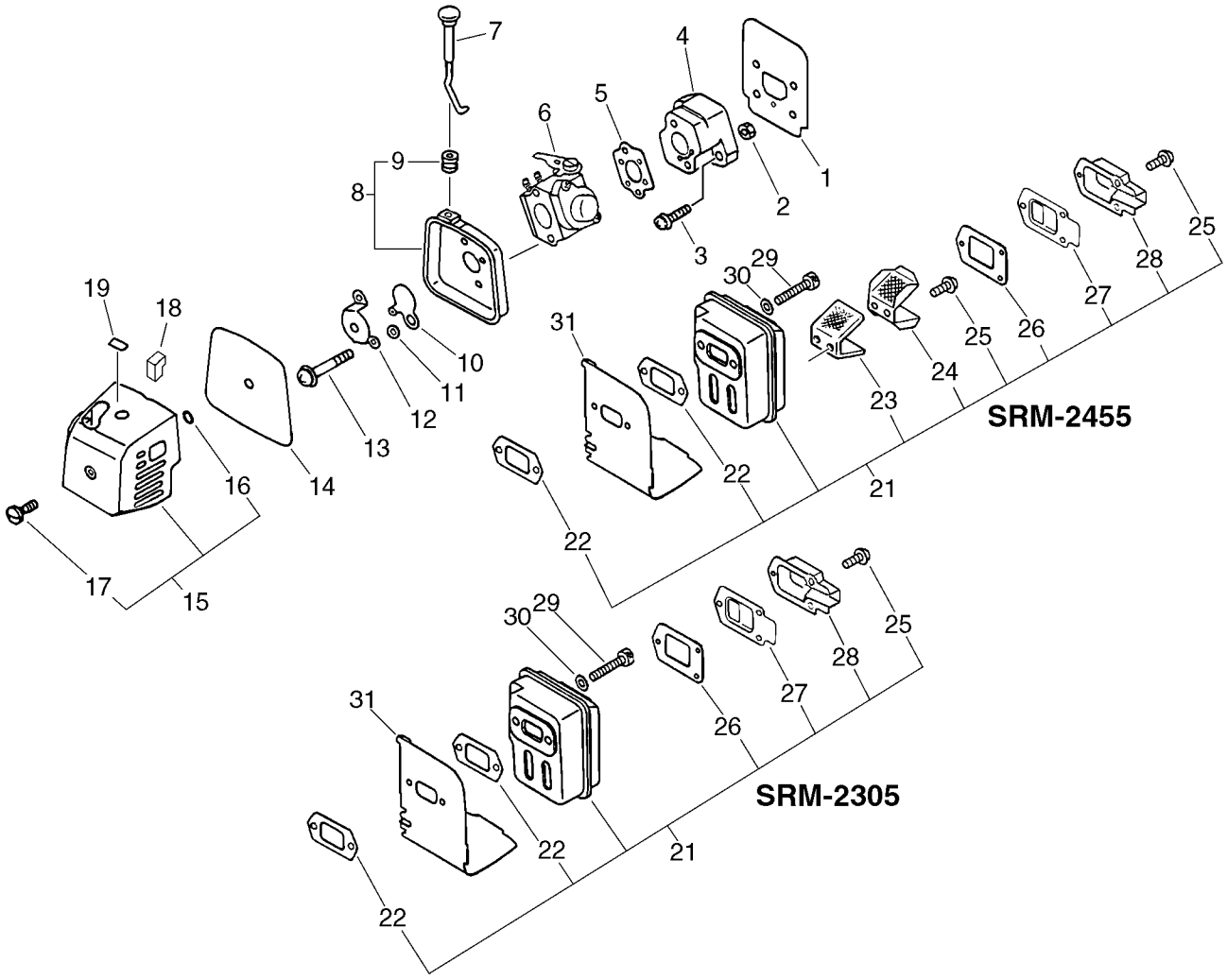
SRM-2455
SRM-2305

INTAKE, EXHAUST **SRM-2305, 2455**

KEY		PART NUMBER	QTY	DESCRIPTION	REMARKS
1		13001042032	1	GASKET,INTAKE	
2		90050000005	2	NUT 5	
3		90023805020	2	SCREW 5*20	
4		13001742031	1	INSULATOR, INTAKE	
5		13001642031	1	GASKET, INTAKE	
6		12520052431	1	CARBURETOR	
7		17851048830	1	ROD, CHOKE	
8		13030104560	1	CASE, AIR CLEANER	
9	+	17881005230	1	GROMMET	
10		17851504560	1	SHUTTER, CHOKE	
11		17851600830	1	SPACER	
12		13041044730	1	BRACKET, AIR CLEANER	
13		90024205057	2	SCREW 5*57	
14		13031004560	1	FILTER, AIR	
15		13030250630	1	COVER ASSY, AIR CLN.	
16	+	90072000004	1	O-RING (P-4)	
17	+	13041540630	1	SCREW	
18		13033652130	2	PLUG	SRM-2455
19		89012147530	1	LABEL, CHOKE	
21		P021000050	1	MUFFLER ASY	SRM-2305
21		14580352131	1	MUFFLER ASY	SRM-2455
22	+	V104000160	2	GASKET,EXHAUST	SRM-2305
22	+	V104000160	2	GASKET,EXHAUST	SRM-2455
23	+	14582052130	1	CATALYST	SRM-2455
24	+	14586252130	1	SCREEN, MUFFLER	SRM-2455
25	+	90024204010	3	SCREW 4*10	SRM-2305
25	+	90023804010	5	SCREW 4*10	SRM-2455
26	+	14586642031	1	GASKET, MUFFLER LID	SRM-2305
26	+	14586642031	1	GASKET, MUFFLER LID	SRM-2455
27	+	14587642030	1	LID, MUFFLER (B)	SRM-2305
27	+	14587642030	1	LID, MUFFLER (B)	SRM-2455
28	+	14586342030	1	HOLDER, SCREEN	SRM-2305
28	+	14586342030	1	HOLDER, SCREEN	SRM-2455
29		90010505055	2	BOLT, H.S. 5*55	
30		90060000005	2	WASHER 5	
31		14563142030	1	COVER, MUFFLER	

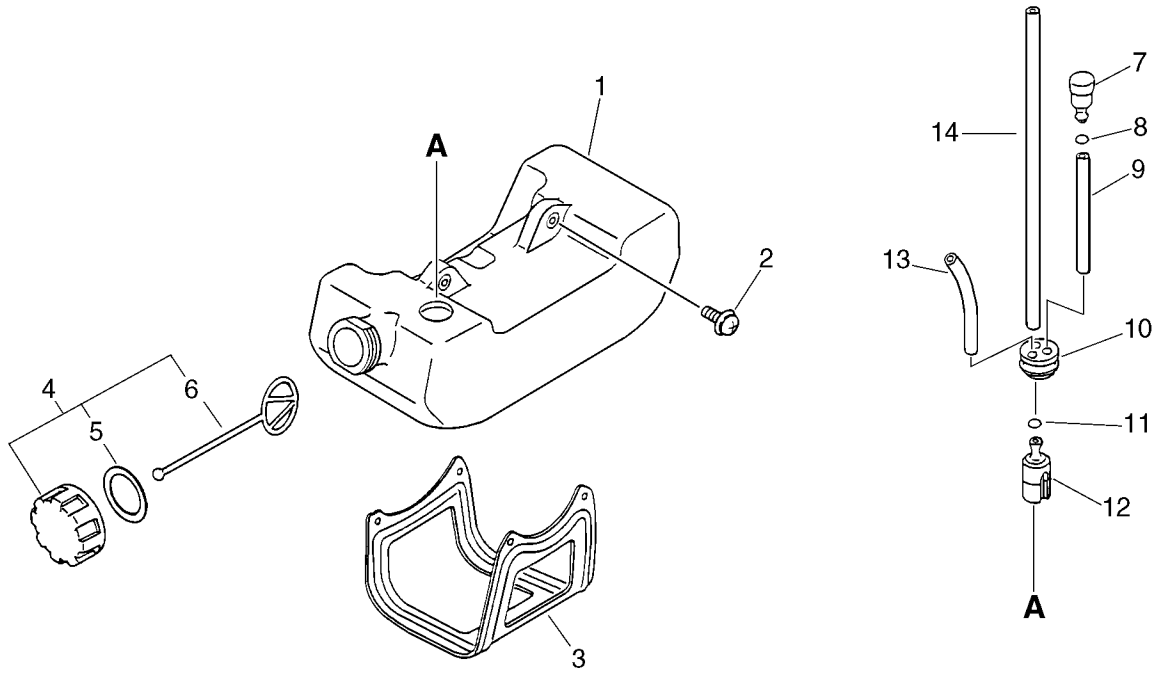
1
A
2
4
5
6
3
7
14
8
9
13
10
11
12
A

FUEL SYSTEM **SRM-2305, 2455**

KEY		PART NUMBER	QTY	DESCRIPTION	REMARKS
1		13100544331	1	TANK, FUEL	
2		90024305016	2	SCREW 5*16	
3		30511042030	1	STAND (BL)	
4		13100455530	1	CAP ASSY, FUEL TANK	
5	+	13101655830	1	GASKET, FUEL CAP	
6	+	13105156030	1	CLIP, FUEL CAP	
7		13130056430	1	VALVE, CHECK	
8		13011100530	1	CLIP	
9		13131244330	1	PIPE, 3*5*70L	
10		13211546730	1	GROMMET, FUEL	
11		13201309820	1	CLIP	
12		13120507320	1	STRAINER, FUEL	
13		13201056330	1	PIPE 3*6*90	
14		13201013930	1	PIPE, FUEL	

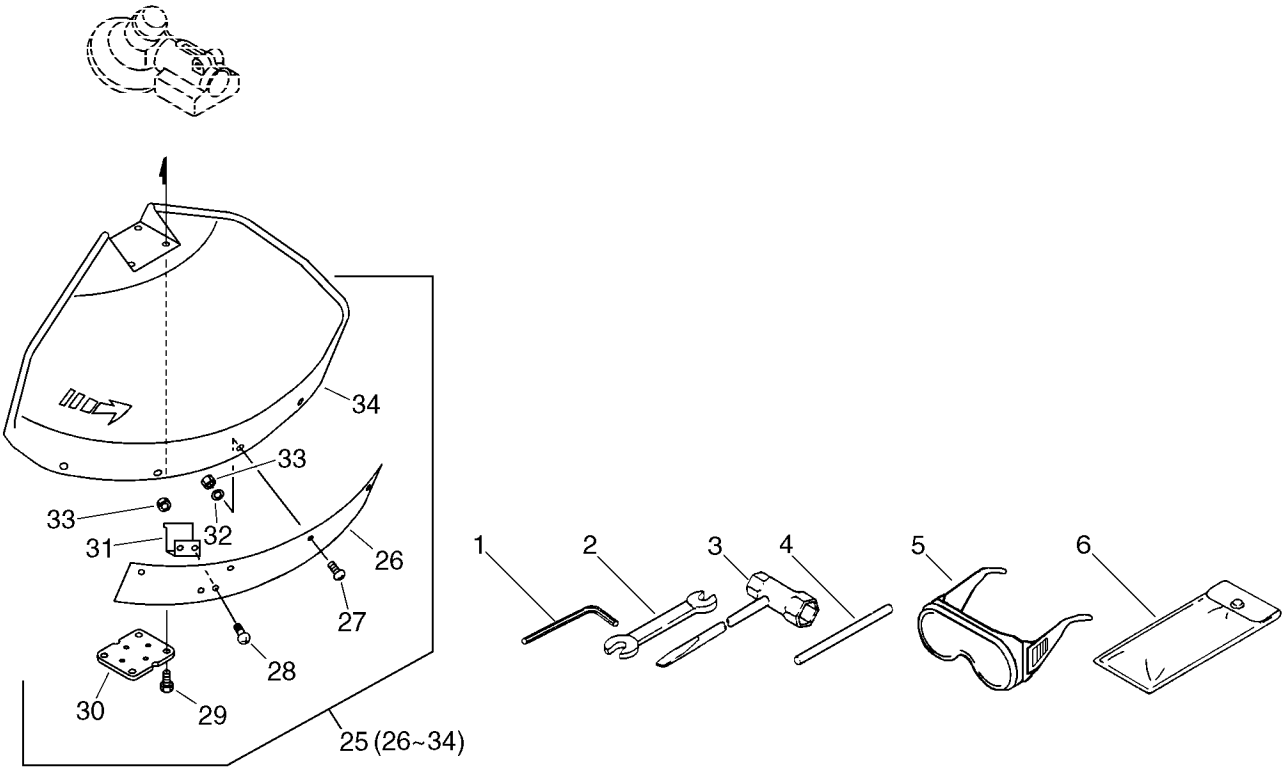
1
34
33
33
32
31
26
27
28
30
29
25 (26~34)
1
2
3
4
5
6

SHIELD, TOOLS **SRM-2305, 2455**

KEY		PART NUMBER	QTY	DESCRIPTION	REMARKS
1		89561000130	1	L-WRENCH (4MM)	
2		89511200330	1	SPANNER 8*10	
3		89541008030	1	WRENCH, W/S. DRIVER	
4		89751801131	1	LOCKING TOOL	
5		89958068730	1	SAFETY GLASSES	6626
6		89851039130	1	BAG, TOOL	
25		69900052931	1	SHIELD ASY	
26	+	69901352130	1	PLATE, SHIELD	
27	+	90016205018	4	BOLT, H.S. 5*18	
28	+	90016205014	2	BOLT, H.S. 5*14	
29	+	90016205025	4	BOLT, H.S. 5*25	
30	+	69901356830	1	PLATE, SHIELD	
31	+	69901654530	1	KNIFE	
32	+	90060300005	4	WASHER 5	
33	+	90050000005	6	NUT 5	
34	+	69901052931	1	SHIELD,BLADE	

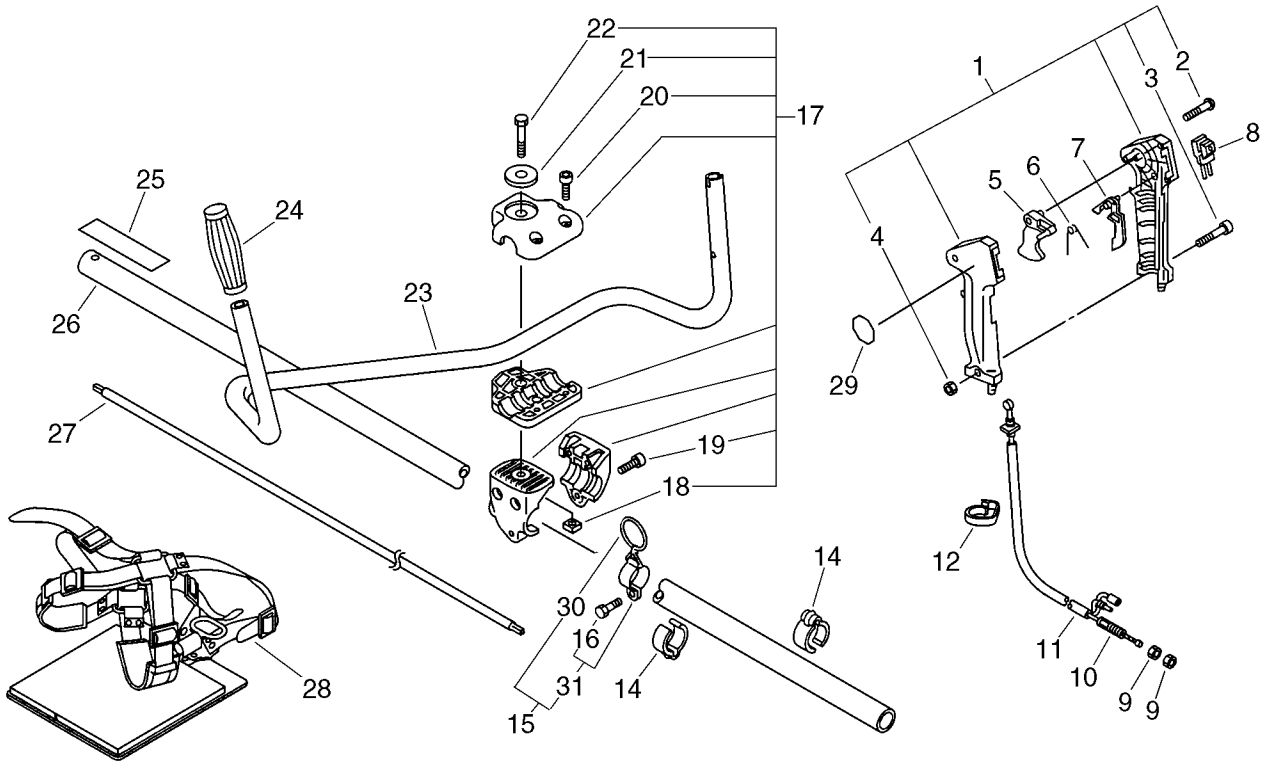
22
21
20
17
1
2
3
8
7
6
5
4
25
24
26
23
29
27
19
18
12
14
30
16
31
14
11
10
9
9
15
28

U-HANDLE ASSEMBLY, DRIVE SHAFT, HARNESS — SRM-2305, 2455

KEY		PART NUMBER	QTY	DESCRIPTION	REMARKS
1		35110247530	1	GRIP ASSY, F-HANDLE	
2	+	90024603025	4	SCREW 3*25	
3	+	90022005030	1	SCREW 5*30	
4	+	90050000005	1	NUT 5	
5		17801005960	1	CONTROL, THROTTLE	
6		17801335631	1	SPRING, THR. LOCK	
7		17801205960	1	LOCKOUT, THROTTLE	
8		16340149230	1	SWITCH, IGNITION	
9		90050200006	2	NUT 6 (3N)	
10		17800147530	1	WIRE, THROTTLE	
11		17812747530	1	TUBE	
12		15911209960	1	CLIP	
14		22492452130	2	CLIP	
15		30120021330	1	HOOK ASS'Y	
16	++	90010505012	1	BOLT, H.S. 5*12	
17		35130152130	1	BRACKET ASSY, HANDLE	
18	+	90056550008	1	NUT	
19	+	90016205030	3	BOLT, H.S. 5*30	
20	+	90016205020	2	BOLT, H.S. 5*20	
21	+	60501454230	1	WASHER	
22	+	35142152130	1	BOLT	
23		C400000000	1	HANDLE,FRONT	
24		35131102330	1	GRIP, HANDLE	
25		89061743130	1	LABEL,CAUTION	
26		61020628230	1	HOUSING ASS'Y D,SFT.	
27		61001827830	1	SHAFT, DRIVE	
28		30100156831	1	HARNESS ASY,SHOULDER	
29		89015739130	1	LABEL, SWITCH	
30	+	30101505330	1	HOOK, BAND	
31	+	30120521330	1	HOOK	

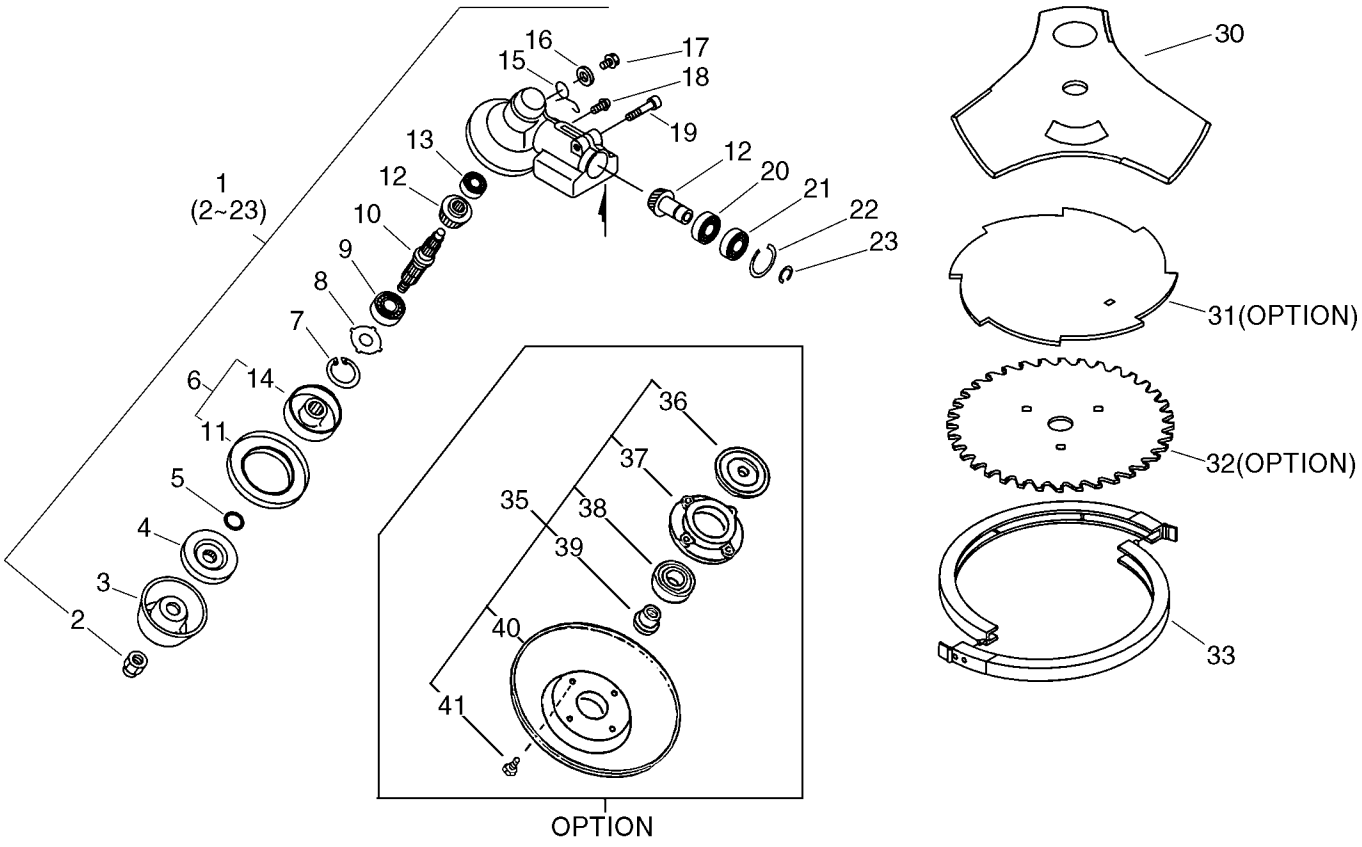
1
(2~23)
2
3
4
5
6
7
8
9
10
11
12
13
14
15
16
17
18
19
20
21
22
23
30
31(OPTION)
32(OPTION)
33
35
36
37
38
39
40
41
OPTION

GEAR CASE ASSEMBLY, BLADES **SRM-2305, 2455**

KEY		PART NUMBER	QTY	DESCRIPTION	REMARKS
1		61040056831	1	CASE ASY, GEAR	
2	+	61032052130	1	NUT 10	
3	+	69922956830	1	PLATE, COVER	
4	+	61031452130	1	PLATE, ADAPTER (L)	
5	+	90072000012	1	O-RING 12	
6	+	C535000000	1	FIXTURE,BLADE	
7	+	90070200032	1	CIRCLIP 32	
8	+	61044456830	1	WASHER	
9	+	90081206201	1	BEARING, BALL 6201	
10	+	61031056830	1	SHAFT, P.T.O.	
11	++	61035256830	1	PLATE, CUP	
12	+	61030040830	1	GEAR SET	
13	+	90081000626	1	BEARING, BALL 626	
14	++	C535000010	1	FIXTURE,BLADE	
15	+	61047352131	1	SPRING	
16	+	90060350008	1	WASHER	
17	+	61043450031	1	BOLT 8* 8	
18	+	90024205010	1	SCREW 5*10	
19	+	90016206025	1	BOLT, H.S. 6*25	
20	+	90085506900	1	BEARING, BALL 6900	
21	+	90085806900	1	BEARING, BALL 6900Z	
22	+	90070200022	1	CIRCLIP 22	
23	+	90070600010	1	CIRCLIP 10	
30		X405000010	1	SAW,BUSH CUTTER	
31		69600144730	1	BLADE,8-CUTTER 9IN	OPTION
32		69500144730	1	SAW,CIRCULAR 9*80T	OPTION
33		89852347130	1	SCABBARD,BLADE	
35		69920056830	1	CAP ASSY, FREE	OPTION
36	+	61031356830	1	PLATE, ADAPTER (U)	OPTION
37	+	69922605430	1	HOLDER, BEARING	OPTION
38	+	90081406202	1	BEARING, BALL 6202	OPTION
39	+	69922704630	1	NUT	OPTION
40	+	69922808930	1	PLATE, COVER	OPTION
41	+	90014105012	4	BOLT 5*12	OPTION

SRM-2305, 2455 LOOP HANDLE ASSEMBLY, THROTTLE CABLE, DRIVE SHAFT

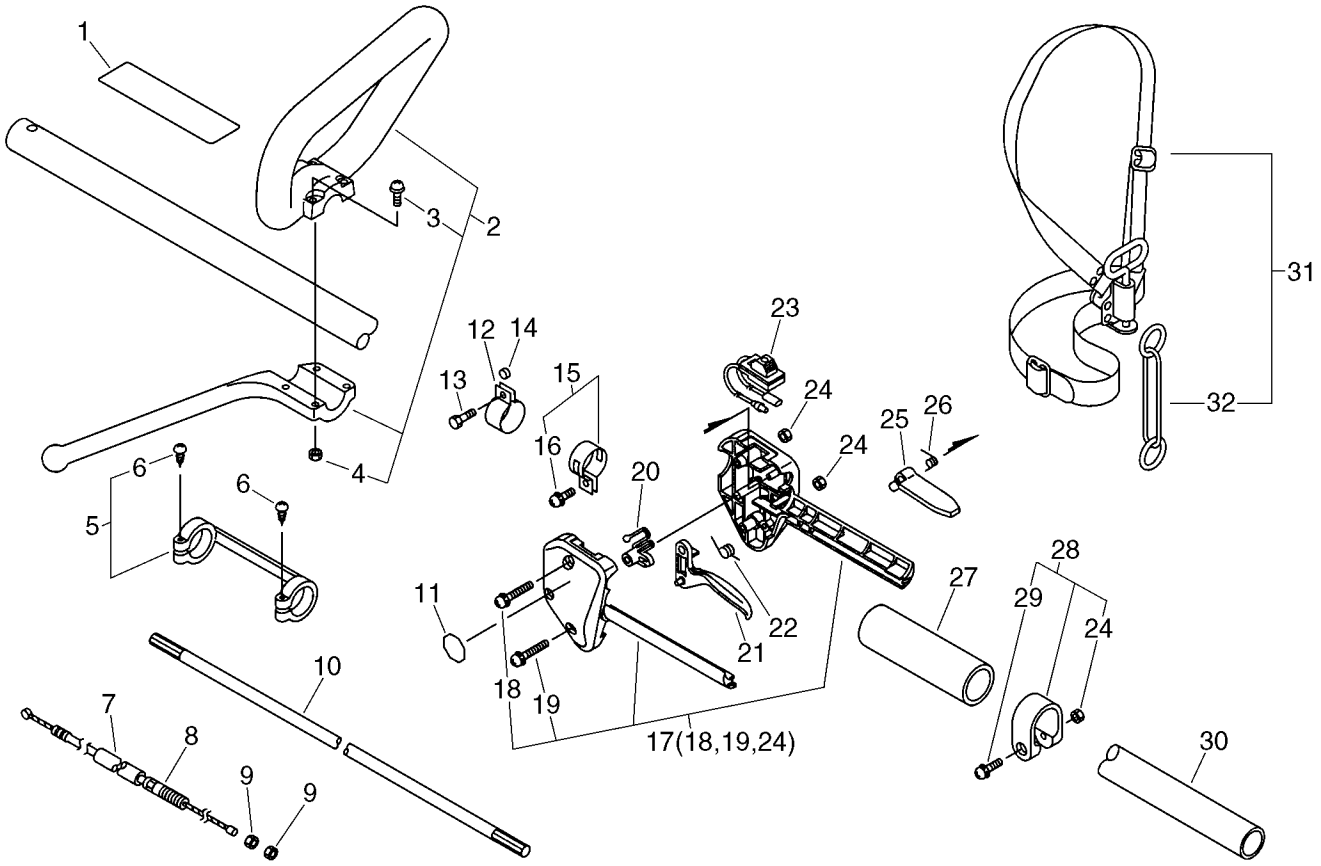

LOOP HANDLE ASSEMBLY, THROTTLE CABLE, DRIVESHAFT **SRM-2305, 2455**

KEY		PART NUMBER	QTY	DESCRIPTION	REMARKS
1		X505000140	1	LABEL,CAUTION	
2		35120154130	1	HANDLE ASSY, LOOP	
3	+	90024205035	4	SCREW 5*35	
4	+	90050000005	4	NUT 5	
5		61028154130	1	COLLER	
6	+	90025304025	2	SCREW 4*25	
7		17812754530	1	TUBE 7*10*130	
8		17800151030	1	WIRE, THROTTLE	
9		90050200006	2	NUT 6 (3N)	
10		61001827830	1	SHAFT, DRIVE	
11		89015739130	1	LABEL, SWITCH	
12		30120708930	1	HOOK	
13		90010005018	1	BOLT 5*18	
14		69901203330	1	SPACER	
15		30120029430	1	BAND ASSY	
16	+	90024205014	1	SCREW 5*14	
17		17800352130	1	BRACKET SET,THROTTLE	6626
18	+	90024205035	1	SCREW 5*35	
19	+	90024205025	1	SCREW 5*25	
20		17801252630	1	LOCKOUT, THROTTLE	
21		17801052130	1	CONTROL, THROTTLE	
22		17804342230	1	SPRING, THR. RETURN	
23		16340049230	1	SWITCH, IGNITION	
24	+	90050000005	2	NUT 5	
24	+	90050000005	1	NUT 5	
25		17809052630	1	LOCKOUT, T. CONTROL	
26		17801352630	1	SPRING, THR. LOCK	
27		35121352130	1	GRIP, FRONT HANDLE	6626
28		61027252130	1	BAND	6626
29	+	90024205028	1	SCREW 5*28	
30		61020628230	1	HOUSING ASS'Y D,SFT.	
31		30100055230	1	HARNESS ASSY	
32	+	30130524330	1	LINK	

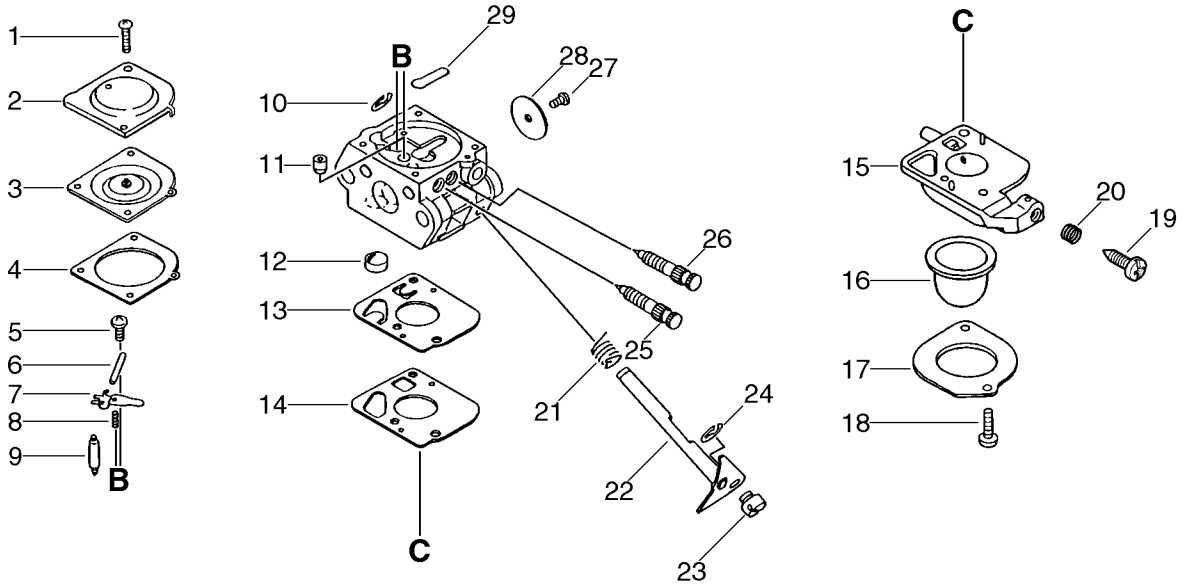
1
2
3
4
5
6
7
8
9
B
10
11
12
13
14
C
29
B
28
27
26
25
21
24
22
23
C
15
20
19
16
17
18

CARBURETOR **SRM-2305, 2455**

KEY		PART NUMBER	QTY	DESCRIPTION	REMARKS
		12520052431	1	CARBURETOR	
1	+	12534452130	2	SCREW	
2	+	12534213210	1	COVER, DIAPHRAGM	
3	+	12534149030	1	DIAPHRAGM	
4	+	12534051030	1	GASKET, DIAPHRAGM	
5	+	12533942030	1	SCREW	
6	+	12533813930	1	PIN, METERING ARM	
7	+	12532342030	1	LEVER, METERING	
8	+	12532242030	1	SPRING, COIL	
9	+	12533706960	1	VALVE,INLET NEEDLE	
10	+	12532715130	1	CLIP	
11	+	12537649030	1	NOZZLE, CHACK VALVE	
12	+	12532642030	1	STRAINER	
13	+	12531212820	1	DIAPHRAGM, FUEL PUMP	
14	+	12532513310	1	GASKET, PUMP	
15	+	P005000590	1	BASE,ASY PRIMER	
16	+	12538108660	1	PUMP, PRIMING	
17	+	12536311610	1	RING	
18	+	12531011610	2	SCREW	
19	+	12533406960	1	SCREW,THROTTLEADJUST	
20	+	12533306960	1	SPRING,IDLE ADJUSTER	
21	+	12531342030	1	SPRING, THRT. RETURN	
22	+	P005000390	1	SHAFT, THROTTLE	
23	+	12537242030	1	SWIVEL	
24	+	12532713930	1	CLIP	
25	+	12532052430	1	NEEDLE, HIGH SPEED	
26	+	12531852430	1	NEEDLE, IDLE	
27	+	12531413930	1	SCREW	
28	+	12531649030	1	VALVE, THROTTLE	
29	+	12534515130	1	PLUG, WELCH	